(Regulations 2017 for VI SEM ECE)

SIXTH SEMESTER

Course Code	Course Title	Lecture Periods	Tutorial Periods	Practical Periods	Credit
EC8652	Wireless Communication	3	0	0	3

COURSE OBJECTIVES:

- Know the characteristic of wireless channel
- Learn the various cellular architectures
- Understand the concepts behind various digital signaling schemes for fading channels
- Be familiar the various multipath mitigation techniques
- Understand the various multiple antenna systems

COURSE OUTCOMES:

On Completion of the course students will be able to

CO1	Gain information on the various types of wireless channels and its parameters associated with it. **(PO1, PO2, PO3,PO5 PO8** and **PSO3)**
CO2	Design cellular networks. **(PO1,PO2, PO3, PO5,PSO3)**
CO3	Analyze probability of error of different digital modulation schemes**.(PO1,PO2, PO3, PO5** and **PSO3)**
CO4	Understand receiver processing schemes for wireless communication systems for improved transceiver **(PO1, PO2, PO3,PO5** and **PSO3)**
CO5	Update latest topics in wireless communication systems and its capacity analysis **(PO1,PO2, PO3, PO5** and **PSO3)**
CO6	Analyze wireless communication systems in terms of its performance metrics. **(PO1,PO2, PO3, PO5** and **PSO3)**

SYLLABUS:

UNIT I WIRELESS CHANNELS 9

Large scale path loss – Path loss models: Free Space and Two-Ray models -Link Budget design – Small scale fading- Parameters of mobile multipath channels – Time dispersion parameters- Coherence bandwidth – Doppler spread & Coherence time, Fading due to Multipath time delay spread – flat fading – frequency selective fading – Fading due to Doppler spread – fast fading – slow fading.

UNIT II CELLULAR ARCHITECTURE 9

Multiple Access techniques - FDMA, TDMA, CDMA – Capacity calculations–Cellular concept- Frequency reuse - channel assignment- hand off- interference & system capacity- trunking & grade of service – Coverage and capacity improvement.

UNIT III DIGITAL SIGNALING FOR FADING CHANNELS 9

Structure of a wireless communication link, Principles of Offset-QPSK, p/4-DQPSK, Minimum Shift Keying, Gaussian Minimum Shift Keying, Error performance in fading channels, OFDM principle – Cyclic prefix, Windowing, PAPR.

UNIT IV MULTIPATH MITIGATION TECHNIQUES 9

Equalisation – Adaptive equalization, Linear and Non-Linear equalization, Zero forcing and LMS Algorithms. Diversity – Micro and Macro diversity, Diversity combining techniques, Error probability in fading channels with diversity reception, Rake receiver

UNIT V MULTIPLE ANTENNA TECHNIQUES 9

MIMO systems – spatial multiplexing -System model -Pre-coding - Beam forming - transmitter diversity, receiver diversity- Channel state information-capacity in fading and non-fading channels.

TOTAL : 45 PERIODS

ADDITIONAL TOPICS:

- Gigabit, Ethernet
- Zigbee OFDM applications
- 4G and 5 G systems
- Vehicular Networks
- Massive MIMO, Multiuser MIMO

CURRICULUM GAP-CONTENT BEYOND SYLLABUS:

- Simulation, Ethics of wireless communication systems

TEXT BOOKS:

1. Rappaport,T.S., ―Wireless communications‖, Pearson Education, Second Edition, 2010.(UNIT I, II, IV)
2. Andreas.F. Molisch, ―Wireless Communications‖, John Wiley – India, 2006. (UNIT III,V)

REFERENCES:

1. Wireless Communication –Andrea Goldsmith, Cambridge University Press, 2011
2. Van Nee, R. and Ramji Prasad, ―OFDM for wireless multimedia communications, Artech House, 2000
3. David Tse and Pramod Viswanath, ―Fundamentals of Wireless Communication, Cambridge University Press, 2005.
4. Upena Dalal, ―Wireless Communication‖, Oxford University Press, 2009.

WEBSITES:

- nptel.ac.in
- ieeexplore.ieee.org/xpl
- www.comsoc.org/wirelessmag

(Regulations 2017 for VI SEM ECE)

QUESTION BANK

UNIT I
PART A

1.Define Path loss. (CO1,PO1,Remember)

Path loss represents signal attenuation as a positive quantity measured in dB. Pathloss is defined as difference in dB between the effective transmitted power and the received power and does not include the effect of antenna gains. $PL(dB) = 10\log\left(\frac{P_t}{P_r}\right) = -10\log\left[\frac{G_t G_r \lambda^2}{(4\pi)^2 d^2}\right]$; where P_t –transmitter power in watts; P_r-receiver power in watts; G_t-Gain of transmitting antenna; G_r-Gain of receiving antenna ; d – distance of separation between transmitter and receiver and λ is the wavelength in meters.

2.What are large scale propagation models (CO1,PO1, Remember)

Propagation models which predict the mean signal strength for an arbitrary transmitter-receiver separation distance are useful in estimating the radio coverage area of a transmitter are called as large scale propagation models.

3.What are small scale propagation models(CO1,PO1, Remember)

Propagation models which characterize the rapid fluctuations of received signal strength over or very short travel distance (a few wavelength) or short time durations are called as small-scale or fading models.

4. What is the need of propagation model? (CO1, PO2, Understand)

Propagation models have traditionally focused on predicting the average received signal strength at a given distance from the transmitter, as well as the variability of the signal strength in close spatial proximity to a particular location. Propagation models that predict the mean signal strength for an arbitrary transmitter-receiver separation distance are useful in estimating the radio coverage area of a transmitter.

5. What is free space propagation model? (Remember)

It is a model which is used to predict received signal strength, when unobstructed line of sight path between transmitter and receiver.

6. What are the three most important effects of small-scale multipath propagation? (or) Write the effects of fading. (CO1,PO1,Remember)

Rapid changes in signal strength over a small travel distance or time interval.
Random frequency modulation due to varying Doppler shifts on different multipath signals.
Time Dispersion caused by multipath propagation delays.

7. What is meant by multipath propagation? (CO1,PO1,Remember)

The signal can get from the transmitter to the receiver via a number of different propagation paths. The signal gets reflected and diffracted by different objects. So each of the paths has a distinct amplitude, delay and direction of arrival. This effect is known as multipath propagation.

8. What are the three basic propagation mechanisms? (CO1,PO1,Remember)

The three basic propagation mechanisms which impact propagation in a mobile communication system are 1.Reflection 2.Diffraction 3.Scattering

9. How diffraction will occur? (CO1,PO2,Understand)

Diffraction occurs when the radio path between the transmitter and receiver is obstructed by a surface that has sharp irregularities.

10. What is scattering? (CO1,PO1,Remember)

When a radio wave impinges on a rough surface, the reflected energy is spread out in all directions due to scattering.

11. What are Fresnel zones? (CO1,PO1,Remember)

The concentric circles on the transparent plane located between a transmitter and receiver represent the loci of the origins of secondary wavelets which propagate to the receiver such that the total path length increases by $\lambda/2$ for successive circles. These circles are called Fresnel zones.

12. Explain knife-edge diffraction model. (CO1,PO1, Understand)

Knife edge is the simplest of diffraction models, and the diffraction loss can be readily estimated using the classical Fresnel solution for the field behind the knife edge.

13. What is the need of path loss models in link budget design? (CO1,PO2,Remember)

The path loss models are used to estimate the received signal level as the function of distance it becomes possible to predict the SNR for a mobile communication system.

14. What are the effects of Multipath fading? (CP1,PO1,Remember)

The effects of multipath fading are Reflection, Diffraction and Scattering.

15. What is meant by small scale fading? (CO1,PO1,Remember)

The rapid fluctuations of the amplitudes, phases, or multipath delays of a radio signal over a short period of time or travel distance is known as small scale fading.

16. What is meant by Large scale fading? (CO1,PO1,Remember)

The rapid fluctuations of the amplitudes, phases, or multipath delays of a radio signal over a long period of time or travel distance is known as large scale fading.

17. What are the factors influencing small scale fading? (CO1,PO1,Remember)

Speed of surrounding objects, Multipath propagation, Speed of the mobile, Transmission bandwidth of the signal

18. What is Intersymbol Interference (ISI)? (CO1,PO1,Remember)

InterSymbol interference (ISI) is a form of distortion of a signal in which one symbol interferes with subsequent symbols which occurs in Frequency Selective Fading Channels.

19. Define coherence bandwidth. (CO1,PO1,Remember)

The coherence bandwidth is related to the specific multipath structure of the channel. The coherence bandwidth is a measure of the maximum frequency difference for which signals are still strongly correlated in amplitude. This bandwidth is inversely proportional to the rms value of time delay spread.

20. What is coherence time? (CO1,PO1,Remember)

It is defined as the required time interval to obtain an envelope correlation of 0.9 or less.

21. Define Doppler shift. (Remember)

The shift in received signal frequency due to motion is called the Doppler shift.

22. What is Doppler spread? (CO1,PO1,Remember)

It is defined as the range of frequencies over which the received Doppler spectrum is essentially non-zero.

23. What are the effects of multipath propagation? (CO1,PO1,Remember)

Slow fading and fast fading

24. What is flat fading? (CO1,PO1,Remember)
If the mobile radio channel has a constant gain and linear phase response over a bandwidth which is greater than the bandwidth of the transmitted signal, then the received signal will undergo flat fading.

25. Write the conditions for flat fading. (CO1,PO1,Remember)
BW of signal<<BW of channel $B_s << B_c$
Symbol period>>Delay spread $T_s >> \sigma_\tau$

26. What is frequency selective fading? How to avoid fading problems? (CO1,PO1,PO2,Remember/Understand)

- If the channel possesses a constant gain and linear phase response over a bandwidth that is, smaller than the bandwidth of transmitted signal, then the channel creates frequency selective fading on the received signal.
- Fading problems are avoided by using diversity techniques, equalizers (in situations where Inter Symbol Interference (ISI) is reduced).

27. Write the conditions for frequency selective fading. (CO1,PO1,Understand)
BW of signal>BW of channel $B_s > B_c$
Symbol period< Delay spread $T_S < \sigma_\tau$

28. Define fast fading channel. (CO1,PO1,Remember)
The channel impulse response changes rapidly within the symbol duration. This type of channel is called fast fading channel.

29. Define slow fading channel. (CO1,PO1,Remember)
The channel impulse response changes at a rate much slower than the transmitted baseband signal. This type of channel is called slow fading channel.

30. What is meant by time dispersion? (CO1,PO1,Remember)
The received signal has a longer duration than that of the transmitted signal, due to the different delays of the signal paths. This is known as time dispersion.

31. What is meant by frequency dispersion? (CO1,PO1,Remember)
The received signal has a larger bandwidth than that of the transmitted signal, due to the different Doppler shifts introduced by the components of the multipath. This is known as frequency dispersion.

32. List the different types of wireless channels. (CO1,PO1,Remember)
Time-flat channels, Frequency -flat channels, Frequency-selective channels

33. Differentiate Flat fading & Frequency selective fading. (CO1,PO1,Understand)

Flat Fading	Frequency Selective Fading
1. Bandwidth of the signal is lesser than the bandwidth of the channel.	1.Bandwidth of the signal is greater than the bandwidth of channel.
2. Delay spread is lesser than symbol period.	2. Delay spread is greater than symbol period.

34. Differentiate Fast fading & slow fading. (CO1,PO1,Understand)

Fast Fading	Slow Fading
1. High Doppler spread.	1. Low Doppler Spread.
2. Coherence time is lesser than symbol period.	2. Coherence time is greater than symbol period.
3. Channel variations faster than base band signal variations.	3. Channel variations slower than base band signal variations.

35. What are the parameters of mobile multipath channels (or) time dispersion parameters? (CO1,PO1,Understand)

Mean excessdelay, root mean square delay spread and Maximum excess delay are the parameters of mobile multipath channels.

36. Define Mean Excess delay. (CO1,PO1,Remember)
Mean excess delay is the first moment of the power delay profile is defined to be

$$\bar{\tau} = \frac{\sum_k a_k^2 \tau_k}{\sum_k a_k^2} = \frac{\sum_k P(\tau_k)\tau_k}{\sum_k P(\tau_k)}$$

37. Define Root Mean Square (RMS) delay spread (CO1,PO1,Remember)
Root Mean Square (RMS) delay spread is the square root of the second central moment of the power delay profile is defined to be $\sigma_\tau = \sqrt{\bar{\tau^2} - (\bar{\tau})^2}$ where

$$\bar{\tau}^2 = \frac{\sum_k a_k^2 \tau^2{}_k}{\sum_k a_k^2} = \frac{\sum_k P(\tau_k)\tau^2{}_k}{\sum_k P(\tau_k)}$$

RMS delay spread values range between microseconds in mobile radio channels and of the order of nanoseconds in indoor radio channels.

38. Define Maximum Excess delay (CO1,PO1,Remember)
Maximum excess delay (X dB) of the power delay profile is defined to be time delay during which multipath energy falls to X dB below the maximum. Maximum excess delay is defined as $\tau_x - \tau_0$, where τ_0 is the first arriving signal and τ_X is the maximum delay at which a multipath component is within X dB of the strongest arriving multipath signal(which does not necessarily arrive at τ_0 .

39. What are the fading due to Multipath delay spread. (CO1,PO1,Remember)
Fading due to multipath delay spread are flat fading and frequency selective fading.

40. What are the fading due to Doppler spread. (Remember)
Fading due to doppler spread is classified as fast fading and slow fading.

41. Define Snell's Law. (CO1,PO1,Remember)
Snell's law states that the ratio of the sine's of the angles of incidence and refraction is equivalent to the ratio of the phase velocities in the two media or equivalent to the reciprocal of the ratio of the indices of the refraction

$$\frac{\sin\theta_1}{\sin\theta_2} = \frac{v_1}{v_2} = \frac{\eta_2}{\eta_1}$$

42. Find the far-field distance for an antenna with maximum dimension of 1m and operating frequency of 900 MHz. (CO1,PO1,Remember)
operating frequency fc=900 MHz; antenna dimension D = 1 m; The far-field distance (or) Fraunhoffer distance (or) Rayleigh Distance is given by

$$d_f = \frac{2D^2}{\lambda} = \frac{2\times 1^2}{\left(\frac{3\times 10^8}{900\times 10^6}\right)} = 6m$$

43. List out any two properties of Wideband Channel. (CO1,PO1,Remember)

Wideband channels suffer from Inter Symbol Interference (ISI), channel varies in gain and phase across the spectrum *s(t)*, resulting in time varying distortion in the received signal *r(t)*.

44. Find the far-field distance for an antenna with maximum dimension of 2m and operating frequency of 1 GHz. (Nov 2015/Dec 2015) (CO1,PO1,Apply)

Operating frequency f_c= 1 GHz; antenna dimension D = 2 m; The far-field distance (or) Fraunhoffer distance (or) Rayleigh Distance is given by

$$d_f = \frac{2D^2}{\lambda} = \frac{2\times 2^2}{\left(\frac{3\times 10^8}{900\times 10^6}\right)} = \frac{8}{\left(\frac{300}{900}\right)} = \frac{8}{\left(\frac{1}{3}\right)} = 24\ m$$

45. Define Coherence Time and Coherence Bandwidth. (Nov/2015) (CO1,PO1,Understand)

Coherence time is defined as the required time interval to obtain an envelope correlation of 0.9 or less.

The coherence bandwidth is related to the specific multipath structure of the channel. The coherence bandwidth is a measure of the maximum frequency difference for which signals are still strongly correlated in amplitude. This bandwidth is inversely proportional to the rms value of time delay spread.

46. Calculate Brewster angle for wave impinging on ground having a permittivity $\varepsilon_r = 5$.
(May/June 2016) (CO1,PO1,Apply)

Brewster's angle is $\sin(\theta_B) = \frac{\sqrt{\varepsilon_r - 1}}{\sqrt{\varepsilon_r^2 - 1}} = \frac{\sqrt{5-1}}{\sqrt{5^2 - 1}} = \frac{\sqrt{4}}{\sqrt{24}} = \frac{2}{4.89} = 0.4089$

$$\theta_B = \sin^{-1}(0.4089) = 24.13^0$$

47. Define Coherence Bandwidth. (May/June 2016) (CO1,PO1,Understand)

The coherence bandwidth is related to the specific multipath structure of the channel. The coherence bandwidth is a measure of the maximum frequency difference for which signals are still strongly correlated in amplitude. This bandwidth is inversely proportional to the rms value of time delay spread.

48.Give the equation for average large scale-path loss between the transmitter and receiver as a function of distance. (Nov/Dec 2016) (CO1,PO1,Remember)

The aveage large scale path loss is

$$PL(dB) = 10\log_{10}\left(\frac{P_t}{P_r}\right) = -10\log_{10}\left(\frac{G_t G_r \lambda^2}{(4\pi)^2 d^2}\right)$$

49.What is frequency selective fading (Nov/Dec 2016) (CO1,PO1,Remember)

- If the channel possesses a constant gain and linear phase response over a bandwidth that is, smaller than the bandwidth of transmitted signal, then the channel creates frequency selective fading on the received signal.
- Fading problems are avoided by using diversity techniques, equalizers (in situations where Inter Symbol Interference (ISI) is reduced).

50. What is the major advantage of Wireless communication? (April/May 2017) (CO1,PO1,Understand)

Information is transmitted in free space where crosstalk is not possible and interference level is very less.

51. Define Coherence Time. In What way does this parameter decide the behaviour of wireless channel? (April/May 2017). (CO1,PO1,Remember/Understand)

It is defined as the required time interval to obtain an envelope correlation of 0.9 or less.

52. What is meant by Multipath Propagation? (Nov/Dec 2017) (CO1,PO1,Remember)

The signal can get from the transmitter to the receiver via a number of different propagation paths. The signal gets reflected and diffracted by different objects. So each of the paths has a distinct amplitude, delay and direction of arrival. This effect is known as multipath propagation.

53. What is flat fading (Nov/Dec 2017) (CO1,PO1,Remember)

If the mobile radio channel has a constant gain and linear phase response over a bandwidth which is greater than the bandwidth of the transmitted signal, then the received signal will undergo flat fading.

54. Compare fast and slow fading (April/May 2018)(CO1,PO2,Understand)

Fast Fading	Slow Fading
1. High Doppler spread.	1. Low Doppler Spread.
2. Coherence time is lesser than symbol period.	2. Coherence time is greater than symbol period.
3. Channel variations faster than base band signal variations.	3. Channel variations slower than base band signal variations.

55.Give the differences between frequency flat and frequency selective fading (April/May 2018), (CO1,PO2,Understand)

Flat Fading	Frequency Selective Fading
1. Bandwidth of the signal is lesser than the bandwidth of the channel.	1.Bandwidth of the signal is greater than the bandwidth of channel.
2. Delay spread is lesser than symbol period.	2. Delay spread is greater than symbol period.

56. What is fast fading? (November/December 2018) (CO1,PO1,Understand)

The channel impulse response changes rapidly within the symbol duration. This type of channel is called fast fading channel.

57. Define Coherence Time. (November/December 2018) (CO1,PO1,Understand)

Coherence time is defined as the required time interval to obtain an envelope correlation of 0.9 or less.

58. Interpret Snell's Law (CO1,PO1,Understand) (November/December 2018)

Snell's law states that the ratio of the sine's of the angles of incidence and refraction is equivalent to the ratio of the phase velocities in the two media or equivalent to the reciprocal of the ratio of the indices of the refraction

$$\frac{\sin\theta_1}{\sin\theta_2} = \frac{v_1}{v_2} = \frac{\eta_2}{\eta_1}$$

60. List the properties of Wideband Channel. (CO1,PO1,Understand) (November/December 2018)

Wideband channels suffer from Inter Symbol Interference (ISI), channel varies in gain and phase across the spectrum *s(t)*, resulting in time varying distortion in the received signal *r(t)*.

61. Differentiate small from large scale fading. (April/May 2019) (CO1,PO1,Understand)

The rapid fluctuations of the amplitudes, phases, or multipath delays of a radio signal over a short period of time or travel distance is known as small scale fading.

The rapid fluctuations of the amplitudes, phases, or multipath delays of a radio signal over a long period of time or travel distance is known as large scale fading.

62. What are the two factors that contribute to the rapid fluctuations of the signal amplitude. (April/May 2019) (CO1,PO1,Understand)

Rapid changes in signal strength over a small travel distance or time interval.
Random frequency modulation due to varying Doppler shifts on different multipath signals.
Time Dispersion caused by multipath propagation delays.

63.State the condition for the occurrence of Flat and Frequency Selective Fading (April/May 2021) (CO1,PO1,Remember)

Flat Fading	Frequency Selective Fading
1. Bandwidth of the signal is lesser than the bandwidth of the channel.	1.Bandwidth of the signal is greater than the bandwidth of channel.
2. Delay spread is lesser than symbol period.	2. Delay spread is greater than symbol period.

64.Define Coherence Time and Coherence Bandwidth (April/May 2021) (CO1,PO1,Remember)

Coherence time is defined as the required time interval to obtain an envelope correlation of 0.9 or less.

The coherence bandwidth is related to the specific multipath structure of the channel. The

coherence bandwidth is a measure of the maximum frequency difference for which signals are still strongly correlated in amplitude. This bandwidth is inversely proportional to the rms value of time delay spread.

PART B

1. **Explain free space path loss and derive the gain expression?. (CO1,PO1,Understand)**
2. **Explain path loss estimation techniques using pathloss models. (CO1,PO1Understand)**
3. **Explain in detail Two Ray model propagation scheme? (CO1,PO1,Understand)**
4. **Explain time variant two path model of a wireless propagation model (CO1,PO1,Understand)**
5. **Discuss in detail the constructive and destructive interference. (CO1,PO1,Understand)**
6. **Explain how Inter Symbol Interference (ISI) is caused and how it is eliminated. (CO1,PO1,Understand)**
7. **What is fading? Explain the types of fading. (CO1,PO1,Understand)**
8. **Explain the different types of multipath propagation in wireless communication. (CO1,PO1,Understand)**
9. **Explain about reflection from dielectrics. (CO1,PO1,Understand)**
10. **Explain the knife edge diffraction model by a single screen. (CO1,PO1,Understand)**
11. **Describe any two methods of diffraction by multiple screens. (CO1,PO1,Understand)**
12. **Explain three basic propagation mechanisms in a mobile communication system (CO1,PO1,Understand)**
13. **What is Brewster angle. Calculate the Brewster angle for a wave impinging on ground having permittivity of $\varepsilon_r = 4$. (CO1,PO1,Remember/Apply)**
14. **With system theoretic description, explain the characteristics of time dispersive channels. (CO1,PO1,Understand)**
15. **Compare coherence bandwidth with coherence time. (CO1,PO1,Understand)**
16. **Briefly explain the factors that influence small scale fading. (Understand)**
17. **How the received signal strength is predicted using the free space propagation model? Explain. (CO1,PO1,Understand)**
18. **If a transmitter produces 50 W of power, express the transmit power in units of dBm and dBW. If 50 W is applied to a unity gain antenna with a 900 MHz carrier frequency, find the received power in dBm at a free space distance of 100m from the antenna. What is (10 km). Assume unity gain for the receiver antenna. (CO1,PO1,Apply)**
19. **Brief about the properties of Rayleigh distribution. (CO1,PO1,Understand)**
20. **Explain briefly on outdoor propagation models. (CO1,PO1,Understand)**
21. **Describe in detail TwoRay Rayleigh model. (CO1,PO1,Understand)**
22. **Describe on Ricean distribution. (CO1,PO1,Understand)**
23. **Brief about the properties of Nakagami distribution. (CO1,PO1,Understand)**
24. **Derive the Impulse response model of a multipath channel and also obtain the relationship between Bandwidth and Received Power. (NoV/Dec 2015).(CO1,PO1,Apply)**
25. **Explain the advantages and disadvantages of the two-ray ground reflection model in the analysis of path loss. (Nov/Dec 2015). (CO1,PO1,Understand)**

26. In the following cases, tell whether the two-ray model could be applied, and justify why or why not:
Case i) : h_1= 35 m ; h_r = 3 m ; d=250 m
Case ii) : h_1= 30 m ; h_r = 1.5 m ; d= 450 m
(Nov/Dec 2015) (CO1,PO2,Apply/Analyze)

27. Prove that in the two-ray ground reflected model, $\Delta = d'' - d' = 2h_t h_r / d$
(Nov/Dec 2015) (CO1,PO2,Evaluate)

28. In free space propagation describe how the signals are affected by reflection, diffraction and scattering. (May/June 2016) (CO1,PO1,Understand)

29. Explain in detail the various parameters involved in mobile multipath channels.(May/June 2016) (CO1,PO1,Understand)

30. Explain the time-variant two-path model of a wireless propagation channel. (Nov/Dec 2016) (CO1,PO1,Understand)

31.Explain fading affects due to multipath time delay spread and fading effects due to Doppler spread. (Nov/Dec 2016) (CO1,PO1,Understand)
What are the factors influencing small scale fading? (Nov/Dec 2016) (CO1,PO1,Understand)

32.If a transmitter produces 50 W of power, express the transmit power in units of dBm and dBW. If 50 W is applied to a unity gain antenna with a 900 MHz carrier frequency, find the received power in dBm at a free space distance of 100m from the antenna. What is (10 km). Assume unity gain for the receiver antenna. (April/May 2017). (CO1,PO1,Apply)

33. Derive the path loss considering a Two way Model for the propagation mechanism in a wireless channel. Is considering just two rays alone sufficient? Why? (April/May 2017) (CO1,PO1,PO2,Apply/Analyze)

34. Determine the proper spatial sampling interval required to make small-scale propagation measurements which assume that consecutive samples are highly correlated in time. How many samples will be required over 10 m travel distance if fc= 1900 MHz and v = 50 m/s. How long would it take to make these measurements, assuming they could be made in real time from a moving vehicle? What is the Doppler Spread B_D for the channel? (April/May 2017) (CO1,PO1,PO2,Apply/Analyze)

35. Describe in detail the parameters of mobile multipath channels with their significance. (April/May 2017)(CO1,PO1,Understand)

36. Compare and Contrast fading and slow fading. In practice fast fading occurs for low data rate (communications). Why? (April/May 2017), (CO1,PO1,Understand)

37. What do you mean by pathloss model? Explain in detail about log-distance path loss model. (Nov/Dec 2017), (CO1,PO1,Understand)

38. What is the need for link calculation? Explain with suitable example.

(Nov/Dec 2017), (CO1,PO1, Understand)

39. Distinguish fast fading and slow fading in wireless channel and explain in detail. (Nov/Dec 2017) (CO1,PO1,Understand)

40. i)Describe briefly about Free Space Propagation Model (April/May 2018) (CO1,PO1, Understand)

ii)Consider a transmitter which radiates a sinusoidal carrier frequency of 1850 MHz. For vehicle moving 60 mph, compute the received carrier frequency if the mobile is moving directly toward the transmitter. (April/May 2018) (CO1,PO1,PO2,Apply/Analyze)

iii)Given that the coherence bandwidth is approximated by equation $B_c = 1/5\sigma_\tau$. Show that a flat fading channel occurs when $T_S \geq 10\sigma_\tau$(), (April/May2018), (CO1,PO1,PO2,Apply/Analyze)

41. Explain briefly about Two ray propagation model (CO1,PO1, Understand) (April/May 2018)

42. i)Explain the various pathloss models for large scale fading. (CO1,PO1,Understand) (November/December 2018)

ii)Whatisfrequencyselectivefading? Explain (November/December 2018) (CO1,PO1,Understand)

43. Describe small scale fading and derive expressions for parameters of mobile multipath channels. (November/December 2018) (CO1,PO1, Understand)

44. i)Describe the free space propagation model and derive the loss in the signal strength. (April/May 2019) (CO1,PO1,Understand)

ii) If the transmit power is 1 W and carrier frequency is 2.4 GHz and the receiver is at a distance of 1 mile from the transmitter. Assume that the transmitter and receiver antenna gains are 1.6

(1) What is the received power in dBm in the free space of a signal?
(2) What is Pathloss in dB?
(3) What is the transmission delay in ns? (April/May 2019) (CO1,PO1,Apply)

45. i)Discuss the flat fading channel characteristics with relevant diagrams. (April/May 2019) (CO1,PO1,Understand)

ii)Describe the classification of small scale fading with respect to Doppler Spread. (April/May 2019) (CO1,PO1,Understand)

46(i) Derive the received power in dBm for a free space Propagation model (CO1,PO1) (April/May 2021)

(ii) Determine the Fraunhofer distance for an antenna with maximum dimension of 1 m and operating frequency of 900 MHz. If the antennas have unity gain calculate the path loss (April/May 2021) (CO1,PO1,PO2,Apply/Analyze)

47.Discuss the impact of time dispersion parameter, Coherence Bandwidth , Doppler Spread and Coherence time on small scale fading. (April/May 2021) (CO1,PO1,Understand)

(Regulations 2017 for VI SEM ECE)

PART-C

1. **If a transmitter produces 50 W of power, express the transmit power in units of dBm and dBW. If 50 W is applied to a unity gain antenna with a 900 MHz carrier frequency, find the received power in dBm at a free space distance of 100m from the antenna. What is (10 km). Assume unity gain for the receiver antenna. (CO1,PO1,Apply)**
2. **Derive the path loss considering a Two way Model for the propagation mechanism in a wireless channel. Is considering just two rays alone sufficient? Why? (CO1,PO1,PO2,Apply/Analyze)**
3. **Describe in detail the parameters of mobile multipath channels with their significance. (CO1,PO1,Understand)**

4Explain path loss estimation techniques using pathloss models. (CO1,PO1Understand)

5.Determine the proper spatial sampling interval required to make small scale propagation measurements which assume that consecutive samples are highly correlated in time. How many samples will be required over 10 m travel distance if fc = 1900 MHz and v = 50 m/s. How long would it take to make these measurements, assuming they could be made in real time for a moving vehicle? What is the Doppler Spread for the channel? (CO1,PO1,Understand) (April/May 2019)

6. **With neat sketch explain and derive the received power for a two ray ground reflection Model) (April/May 2021) (CO1,PO1,Understand)**
7. **Analyze the impact of both co-channel and adjacent chancel interference on system capacity in a cellular system (April/May 2021) (CO1,PO2,Understand)**

EC8652-Assignment – I

SET I

1.Compute the Rayleigh distance of a square antenna with 20-dB gain. (CO1,PO1,Apply)

2. **Find the far field distance for an antenna with maximum dimension of 1 m and operating frequency of 900 MHz. (CO1,PO1,Apply)**
3. **If a transmitter produces 50 Watts of power, express the transmit power in units of (a) dBm (b) dBW. If 50 Watts is applied to a unity gain antenna with a 900 MHz carrier frequency, find received power in dBm at a free space distance of 100 m from antenna. What is Pr(10 km) ?. Assume a unity gain for the receiver antenna. (CO1,PO1,Apply)**
4. **Assume a receiver is located at 50 km from a 50 W transmitter. The carrier frequency 900 MHz, assume free space propagation is assumed where Gt=1 and Gr=2. Find the a) power at the receiver b) magnitude of the E-field at the receiver antenna c) the RMS voltage applied to the receiver input assuming that the receiver antenna has a purely real impedance of 50 ohms and is matched to the receiver. (CO1,PO1,Apply)**

5.Demonstrate that if the medium 1 is free space and medium 2 is a dielectric, both the parallel and perpendicular reflection coefficients approaches as the angle of incidence approaches as 0, regardless of relative permittivity. (CO1,PO1,Understand)

(Regulations 2017 for VI SEM ECE)

EC8652-Assignment -SET II

1. **Calculate the Brewster's angle for a wave impinging on ground having a permittivity of relative permittivity of 4. (CO1,PO1, Apply)**
2. **A mobile is located 5 km away from a base station and uses a vertical lambda/4 monopole antenna with a gain of 2.55 dB to receive cellular radio signals. The E-field at 1 km from the transmitter is measured to be 10^{-3} V/m. The carrier frequency used is 900 MHz. Find the length and gain of the receiver antenna. Find the received power at the mobile using 2-ray ground reflection model assuming height of the transmitting antenna is 50 m and the receiving antenna is 1.5 m above the ground. (CO1,PO1, Apply).**

3. **Compute the diffraction loss for the three cases. Assume lambda =1/3; d1=1 km; d2=1 km; and i)h=25 m; ii) h=0 iii) h= -25 m; Find the fresnel zone in which the tip of the obstruction lies and the diffraction loss. (CO1,PO2, Analyze)**
4. **Consider the diffraction by a screen with a dTX= 200m; dRX= 50 m; hTX= 20 m; hRX= 1.5m ; hs= 40 m; at a centre frequency of 900 MHz. Compute the diffraction coefficient. (CO1,PO1, Apply)**
5. **There are three screens 20m apart from each other 30, 40 and 25 m high. The first screen is 30 m from the TX, the last screen is 100 m from the RX. The TX is 1.5 m high, the RX is 30m is high. Compute the attenuation due to diffraction at 900 MHz by the Deygout method. (CO1,PO1, Apply)**

EC8652-Assignment -SET III

1. **Consider a transmitter which radiates a sinusoidal carrier frequency of 1850 MHZ. For a vehicle moving 60 mph, compute the received carrier frequency if a mobile is moving a) directly towards the transmitter b) directly moving away from the transmitter c) in a direction which is perpendicular to the direction of arrival of the transmitted signal. (CO1,PO1,Apply).**

2. **Calculate the mean excess delay, rms delay spread, and the maximum exces delay (10dB) for the multipath delay (10 dB) for the multipath profile in the figure below. Estimate the 50% coherence bandwidth of the channel. Would this channel be suitable for AMPS or GSM service without the use of an equalizer? (CO1,PO2, Analyze)**

3. **For a Rayleigh fading signal compute the positive going level crossing rate for p=1, when the maximum Doppler frequency (fm) is 20 Hz. What is the maximum velocity of the mobile for this Doppler frequency if the carrier frequency is 900 MHz? (CO1,PO1,Apply)**

4. **Find the average fade duration for thresholds p= 0.01, p= 0.1; and p =1 when the Doppler frequency is 200 Hz (CO1,PO1,Apply)**

5. **Determine the proper spatial sampling interval required to make small-scale propagation measurements which assume that consecutive samples are highly correlated in time. How many samples will be required over 10 m travel distance if f_c = 1900 MHz and v = 50 m/s. How long would it take to make these measurements, assuming they could be made in real time from a moving vehicle? What is the Doppler spread B_D for the channel? (April/May 2019) (CO1,PO1,Apply)**

UNIT II
PART A

1. What is a multiple access technique. (CO2,PO1,Remember)

Multiple access techniques are used to allow many mobile users to share simultaneously a finite amount of radio spectrum. The three major techniques used to share the available bandwidth in a wireless communication system are Frequency Division Multiple Access (FDMA), Time Division Multiple Access (TDMA) and Code Division Multiple Access(CDMA).

2. What are the different types of multiple access schemes? (CO2,PO1,Remember)

FDMA-Frequency division multiple access-different frequencies are assigned to different users
TDMA-Time division multiple access-different time slots are assigned to different users.
CDMA-Code division multiple access-each user is assigned a different code.

3. What are the advantages of FDMA? (CO2,PO1,Remember)

The transmitter and receiver require much less digital signal processing, Synchronization is simple.

4. What are the disadvantages of FDMA? (CO2,PO1,Remember)

1. Sensitivity to fading 2. Sensitivity to random frequency modulation 3. Inter modulation

5. What is slotted ALOHA? (CO2,PO1,Remember)

The BS prescribes a certain slot structure. Each TX has a synchronized clock that makes sure that the start of the transmission time coincides with the beginning of a slot. Thus partial collisions cannot occur anymore.

6. What is un-slotted ALOHA? (or) Pure ALOHA (CO2,PO1,Remember)

If the starting time of packet transmission is chosen completely at random by the transmitter, then the system is called un-slotted ALOHA.

7. What is meant by carrier sense multiple access (CSMA)? (CO2,PO1,Remember)

A transmitter can determine whether the channel is currently occupied by another user. This knowledge can be used to increase the efficiency of a packet switched system. If one user is transmitting, no other user is allowed to send a signal. Such a method is called CSMA.

8. What are the important parameters of CSMA system? (CO2,PO1,Remember)

Detection delay and propagation delay are the two important parameters. Detection delay is a measure for how long it takes a transmitter to determine whether the channel is free. Propagation delay is the measure of how long a data packet takes to get from the MS to the BS.

9. What is non-persistent CSMA? (CO2,PO1,Remember)

The Transmitter senses the channel. If the channel is busy, the Transmitter waits random time duration until retransmission. This scheme is called non-persistent CSMA.

10. What is p-persistent CSMA? (CO2,PO1,Remember)
This method is applied in slotted channels. When a TX determines that a channel is available, it transmits with probability p in the subsequent frame. Otherwise it transmits one time slot later.

11. What is 1-persistent CSMA? (CO2,PO1,Remember)
The TX constantly senses the channel, until it realizes that the channel is free. Then it immediately sends off the packet.

12. What is meant by CSMA with collision detection? (CO2,PO1,Remember)
In this method, a node observes whether two transmitters start to transmit simultaneously. If so, transmission is immediately terminated.

13. What is meant by Data Sense Multiple Access(DSMA)? (CO2,PO1,Remember)
In DSMA the downlink includes a control channel, which transmits at periodic intervals a busy/available signal that indicates the state of the channel. If a user finds the channel to be free, it can immediately send off a data packet.

14. What is meant by Packet Reservation Multiple Access(PRMA)? (CO2,PO1,Remember)

In packet reservation multiple access, each MS can send a request to transmit a data packet. A control mechanism answers by telling the MS when it is allowed to send off the packet. This eliminates the risk of collisions of data packets.

15. Classify the routing methods. (CO2,PO1,Remember)
Routing methods are classified into two types namely source driven routing and table driven routing.
1. Source driven routing- the header of the packet includes the complete route, and the nodes just follow the instructions for forwarding. The drawback is that the header can become quite long, especially for packets with little payload. This leads to a decrease in spectral efficiency.
2. Table driven routing- each node stores in a table the nodes to which it should forward packets. This method has better spectral efficiency.

16. State advantages of CDMA over FDMA. (CO2,PO1,Remember)

- In CDMA data is sent over a wider bandwidth using PseudoRandom (PN) sequences and provides security of the transmitted data. CDMA is a digitzed version of data transmission

- FDMA uses different frequencies to transmit information data and it is analog mode of data transmission

17. State the difference between Narrowband system and Wideband System. (CO2,PO1,Understand)

Narrowband System	**Wideband System**
The available radio spectrum is divided into a large number of narrowband channels	The transmission bandwidth of a single channel is much larger than the coherence bandwidth of

	the channel.
It has small value of delay Spread	It has a large value of delay spread
Coherence bandwidth is very high	Coherence bandwidth is very small

18. What are the basic modules of a basic cellular system. (CO2,PO1,Remember)

The basic modules of a basic cellular system are Mobile Station (MS), Base Station (BS) and Mobile Switching Centre (MSC). MSC can also be linked to Public Switched Telephone Network (PSTN) and further to other networks such as Internet.

19. What is the working nature of cellular telephony? (CO2,PO1,Remember)

The information flow is bi-directional, the user can be anywhere within a network, a call can originate from either the network or the user, location of a user can change significantly during a call, base station does not need to have any network functionality and there is no central system.

20. What is a Mobile Station, Base Station and Mobile Switching Center (or) Mobile Telephone Switching Office (MTSO). (CO2,PO1,Remember)

Mobile Station is defined as a station in cellular network used for communicating during motion at any region. Mobile stations can be handheld portable units or mounted on vehicles.

Base Station is defined as fixed station in a mobile radio system for radio communicating within mobile stations. Base Stations are located at the centre of the cell or on the edge of the cell.

Mobile Switching Centre (MSC) is the switching centre which coordinates the routing of calls in a large service area. MSC connects the base stations and the mobiles to the PSTN.

21. What is the difference between cordless telephony and cellular phone? (CO2,PO1, Understand)

The cordless telephone is associated with only a single base station. There is no MSC. The base station is directly connected to the PSTN.

22.. What are the characteristics of cordless telephony? (CO2,PO1,Understand)

1. The BS does not need to have any network functionality. 2. There is no central system

23. What is the difference between cordless phone and fixed wireless access? (CO2,PO1,Understand)

In fixed wireless access, there is no mobility of the user devices, BS always serves multiple users.

24. Differentiate Cellular Telephony and Cordless Telephony. (CO2,PO1,Understand)

Cordless Telephony: Cordless Telephone system is based on full duplex communication which has a radio to provide connectivity from a portable handset to a dedicated base station. This in turn is connected to a dedicated telephone line.

Cellular Telephony: A Cellular Telephone system is a full duplex system which provides unlimited mobility to a user anywhere within the coverage area of the network. Cellular telephony uses frequency reuse concept in same frequency and is used in hexagon cells separated by a certain

distance.

25. Define frequency reuse distance. (CO2,PO1,Remember)

It is defined as the distance between two cells that can use the same frequency channels.

26. What is cluster? What is its significance? (CO2,PO1,Understand)

Cluster is a group of cells that all use different frequencies. No co channel interference within such a cluster. The cluster size also determines the capacity of the cellular system.

27. What is meant by frequency reuse or frequency planning? (CO2,PO1,Understand)

(or)

Mention the significance of frequency reuse concepts in cellular networks. (CO2,PO1,Understand)

By limiting the coverage area to within the boundaries of a cell, the same group of channels may be used to cover different cells that are separated from one another by distances large enough to keep interference levels within tolerable limits. This design process of selecting and allocating channel groups for all of the cellular base stations within a system is called frequency reuse. Significance of frequency reuse is that capacity of the system is increased and spectrum is utilized efficiently.

28. Define footprint. (CO2,PO1,Remember)

The actual radio coverage of a cell is known as footprint.

29. Define Handoff (CO2,PO1,Remember)

When a mobile moves into a different cell while a call is in progress, the Mobile Switching Centre (MSC) automatically transfers the call to a new channel belonging to the new base station. This handoff operation not only identifies a new base station but also requires voice and control signals be allocated to channels associated with new base station.

30. Give an expression for capacity of a system. (CO2,PO1,Remember)

$C = MKN = MS$ where M= no. of clusters, N= no of cells, K=no of channels in a cell, S= total no of available radio channels.

31. Define Co-Channel Interference and Adjacent Channel Interference (CO2,PO1,Remember)

Frequency Reuse implies that in a given coverage area there are several cells that use the same set of frequencies. These cells are called co-channel cells and the interference between the cells is called Co-Channel Interference.

Interference resulting from signals which are adjacent in frequency to the desired signal is called Adjacent Channel Interference

32. What are the steps find the nearest co channel neighbors? (CO2,PO1,Understand)

No of cells per cluster is given by $N= i^2 +ij +j^2$.

To find the nearest co channel neighbours of a particular cell, Move i cells along any chain of hexagons and then Turn 60 degrees counter-clockwise and move j cells.

33. What are the different methods available to increase the capacity of the system? (CO2,PO1,Remember)

Increasing the amount of spectrum used, More efficient modulation format and coding, Discontinuous transmission, Multi user detection, Reduction of cell radius, Use of sector cells and

Multiple antennas.

34. Define Cell Dragging. (CO2,PO1,Remember)
Cell Dragging results from pedestrian users that provide a very strong signal to the base station. Such situation occurs in an urban environment when there is Line Of Sight (LOS) radio path between subscriber and the base station.

35. Define Dwell Time (CO2,PO1,Remember)
The time over which a call is maintained within a cell without handoff is called Dwell Time.

36. Define Cell Breathing (CO2,PO1,Remember)
Cell breathing effect arises when the CDMA system has dynamic and timevarying coverage region which varies depending on instantaneous number of users on the channel. The effect of cell breathing requires the wireless engineer to carefully plan the coverage and signal levels for the best and worst cases for serving cells as well as nearest neighbor cells from both a coverage and interference. The breathing phenomenon can lead to abrupt dropped calls resulting in abrupt coverage.

37. Why a Hexagon is used to represent a cell Geometry. (CO2,PO1,Understand)

- For geometric representation of a cell to cover the entire region without overlap and equal area, three sensible choices are a square, an equilateral triangle and a hexagon.
- If circle is selected to represent a coverage area of a base station, adjacent circles cannot be overlaid upon a map without leaving gaps or creating overlapping regions.
- Also, for a given distance between the centre of a polygon and its farthest perimeter points, the hexagon has the largest area of the three. Thus by using the hexagon geometry, fewest number of cells can cover a geographic region, and hexagon closely approximates a circular radiation pattern which would occur for an omnidirectional base station antenna and free space propagation.

38. Distinguish between Fixed Channel assignment and Dynamic channel assignment. (CO2,PO1,Understand)

Fixed Channel Assignment	Dynamic Channel Assignment
In Fixed channel assignment strategy the cell is allocated a predetermined set of voice channels. Any call attempt within the cell can only be serviced by the unused channels in that particular cell. If all the channels in the cell are occupied, the call is blocked and the subscriber does not receive service.	In a Dynamic channel assignment strategy, voice channels are not allocated to different cells permanently. Instead, each time a call request is made the serving base station requests a channel from the MSC. The switch then allocates a channel to the requested cell following an algorithm that takes into account the likelihood of future blocking within the cell, the frequency of use of the candidate channel, reuse distance

	of the channel and other cost functions.
Several variations of the fixed assignment strategy exist. In one approach, called the borrowing strategy, a cell is allowed to borrow channels from a neighboring cell if all of its own channels are already occupied.	Dynamic channel assignment reduces the likelihood of blocking, which increases the trunking capacity of the system since all the available channels in a market are accessible to all of the cells. Dynamic channel assignment strategies require the MSC to collect real-time data on channel occupancy, traffic distribution and Radio Signal Strength Indications (RSSI) of all channels on a continuous basis.

39. What are the functions of control channel? What are the types? (CO2,PO1,Remember)

Control Channels are setup channels responsible for setting up a call and moving it to an unused voice channel. Control channels also carry call initiation and service requests. Control channels are of two types forward control channel and reverse control channel.

40. What are the characteristics of trunking radio? (CO2,PO1,Remember)

1. Group calls 2. Call priorities 3. Relay networks

41. What is Grade of Service. (Nov/Dec 2015) (CO2,PO1,Remember)

Grade of Service (GOS) is a measure of ability of a user to access a trunked system during the busiest hour. The intensity of traffic is measured in unit called as Erlang. There are two types of trunked system namely Blocked Calls Cleared and Blocked Calls Delayed.

42. What is a Blocked Calls Cleared (BCC) System (or) Erlang B formula. (CO2,PO1,Remember)

Blocked Calls Cleared (BCC) is one where there are no available channels and the requesting user is blocked without access and is free to try again later. Erlang bB formula determines the probability that a call is blocked and is a measure of GOS of a trunked system which provides no queueing for blocked calls. Erlang B formula is

$$\Pr[blocking] = \frac{\frac{A^C}{C!}}{\sum_{k=0}^{C} \frac{A^k}{k!}} = GOS$$

where C is the number of trunked channels offered by a trunked radio system and A is the total offered traffic.

43. What is Blocked Calls Delayed (BCD) system (or) Erlang C formula (CO2,PO1,Remember)

Blocked Calls Delayed has a queue which holds calls which are blocked. If the channel is not available immediately, the call request is delayed until the channel becomes available. The likelihood of a call not having immediate access to a channel is determined by the Erlang C formula

$$\Pr[delay > 0] = \frac{\frac{A^C}{C!}}{A^C + C!\left(1 - \frac{A}{C}\right)\sum_{k=0}^{C}\frac{A^k}{k!}}$$

44. What are the methods for increasing the capacity of cellular networks (CO2,PO1,Remember)

Cell splitting, cell sectoring and Microcell Zone approaches are the methods used to increase the capacity of cellular networks.

45. Define Cell splitting (CO2,PO1,Remember)

Cell splitting is the process of splitting of a hexagon cell into smaller sub cells with radius R/2.

46. Define Cell Sectoring(CO2,PO1,Remember)

Cell sectoring is the process of sectoring a cell into three 120 degree sectors and six 60 degree sectors.

47. Define Microcell zone approaches.(CO2,PO1,Remember)

Microcell Zone concept is a process to reduce the number handoffs due to small cell sizes due to cell sectoring and cell splitting.By having a zone connected to a base station and sharing the same radio equipment it is possible control increased load due to switching and control the link elements of the mobile system.

48. Define co-channel reuse ratio(Nov/Dec 2015) (CO2,PO1,Remember)

Q defines Cochannel reuse ratio and for a hexagonal geometry it is $Q = \frac{D}{R} = \sqrt{3}N$; where D is the distance between centres of nearest co-channel cells and R is a function of radius of cell

49. What is soft handoff in mobile communication (May/June 2016) (CO2,PO1,Remember)

Soft handoff is one in which the channel in the source cell is retained and used for a while in parallel with the channel in the target cell. In this case the connection to the target is established before the connection to the source is broken, hence this handover is called *make-before-break*. The interval, during which the two connections are used in parallel, may be brief or substantial. For this reason the soft handover is perceived by network engineers as a state of the call, rather than a brief event.

50. What is a multiple access technique? (May/June 2016) (CO2,PO1,Remember)

Multiple access techniques are used to allow many mobile users to share simultaneously a finite amount of radio spectrum. The three major techniques used to share the available bandwidth in a wireless communication system are Frequency Division Multiple Access (FDMA), Time Division Multiple Access (TDMA) and Code Division Multiple Access(CDMA).

51.State advantages of CDMA over FDMA (Nov/Dec 2016) (CO2,PO1Remember)

- In CDMA data is sent over a wider bandwidth using PseudoRandom (PN) sequences and provides security of the transmitted data. CDMA is a digitzed version of data transmission
- FDMA uses different frequencies to transmit information data and it is analog mode of data transmission

52.Define Grade of Service (Nov/Dec 2016) (CO2,PO1,Remember)

Grade of Service (GOS) is a measure of ability of a user to access a trunked system during the busiest hour. The intensity of traffic is measured in unit called as Erlang. There are two types of trunked system namely Blocked Calls Cleared and Blocked Calls Delayed.

53.Why is cellular concept used for mobile telephony (April/May 2017) (CO2,PO1,Remember)

Cellular concept used for mobile telephony as it can cover a large coverage area through frequency reuse concept.

54.In a cellular network among a handoff call and a new call, which one is given priority? Why? (April/May 2017) (CO2,PO2,Understand)

Different systems have different methods for handling and managing handoff request. Some systems handle handoff in same way as they handle new originating call. In such system the probability that the handoff will not be served is equal to blocking probability of new originating call. But if the call is terminated abruptly in the middle of conversation then it is more annoying than the new originating call being blocked. So in order to avoid this abrupt termination of ongoing call handoff request is given priority to new call this is called as handoff prioritization.

55.What do you mean by forward and reverse channel(Nov/Dec 2017) (CO2,PO1,Remember)

The channel between the Base station and the Mobile Station is called as Forward channel.
The channel between Mobile station and the Base Station is called as Reverse channel.

56.Define Frequency Reuse (Nov/Dec 2017) (CO2,PO1,Remember)
This design process of selecting and allocating channel groups for all of the cellular base stations within a system is called frequency reuse.

57.Define Frequency Reuse (April/May 2018) (CO2,PO1,Remember)
This design process of selecting and allocating channel groups for all of the cellular base stations within a system is called frequency reuse.

58. Differentiate between FDMA, TDMA and CDMA technologies (April/May 2018) (CO2,PO2,Understand)
FDMA-Frequency division multiple access-different frequencies are assigned to different users
TDMA-Time division multiple access-different time slots are assigned to different users.
CDMA-Code division multiple access-each user is assigned a different code.

59. List the features of Cellular Concept. (November/December 2018) (CO2,PO1,Understand)

The features of Cellular concept are Frequency Reuse (or) Frequency Planning, Handoff Methods, and Channel Assignment.

60. How is frequency reuse distance measured in cellular system. (November/December 2018) (CO2,PO1,Understand)

Frequency Reuse Distance is When the same channel is to be reused in two cells, the two cells are called cochannel cells. The distance *D* is the separation of the two cochannel cells. The smaller the *D*, the greater the spectrum efficiency would be. The key parameter, a ratio of *D*/*R*, where *R* is the cell radius, is used to measure the spectrum efficiency.

60. How FDMA handles near far-problem? (April/May 2019) (CO2,PO2,Understand)

Some of the mobile units are close to the base station while others are far away from it. A strong signal received at the base from a near by mobile unit marks the weak signal from a far-end mobile unit. This phenomenon is called near far problem. The near far problem can be avoided through power control.

61. What do you mean by Mobile Assisted Handoff (MAHO) (April/May 2019) (CO2,PO1,Understand)

In Mobile Assisted Handoff(MAHO) the mobile measures the signal levels from the various Access Points (APs) using a periodic beacon generated b the APs(to keep track of the locations of the mobiles). The mobile collects a set of power levels from different APs and feeds it back to the MSC via the serving AP, for the handoff decision making. MAHO is particularly suited for microcellular environments where the handoffs are more frequent.

62.Write down the procedure involved in the determination of Co-Channel Cell (April/May 2021) (CO2,PO1,Understand)

No of cells per cluster is given by $N= i^2 +ij +j^2$.

To find the nearest co channel neighbours of a particular cell, Move i cells along any chain of hexagons and then Turn 60 degrees counter-clockwise and move j cells.

63.Define frequency reuse (April/May 2021) (CO2,PO1,Understand)

This design process of selecting and allocating channel groups for all of the cellular base stations within a system is called frequency reuse. Significance of frequency reuse is that capacity of the system is increased and spectrum is utilized efficiently.

PART B

1. **With illustration, explain CDMA scheme. (CO2,PO1,Understand)**
2. **Discuss about Packet Radio techniques. (CO2,PO1,Understand)**
3. **Explain Carrier Sense Multiple Access scheme and its classifications.**

(CO2,PO1,Understand)

4. **Explain the methods of increasing the capacity of wireless cellular networks. (CO2,PO1,Understand)**
5. **With a neat block diagram, explain cellular network architecture. (CO2,PO1,Understand)**
6. **Derive the capacity of a cellular system using frequency reuse concept. (CO2,PO1,Apply)**
7. **Explain a handoff (or) handover scenario at cell boundary. Compare different types of handoff techniques. (CO2,PO1,Understand)**
8. **Explain the concept of trunking and grade of service. Derive Erlang B formula. (CO2,PO1,Understand/Apply)**
9. **Derive Erlang C formula for a trunked system (CO2,PO1,Understand/Apply)**
10. **Briefly explain the methods to improve the coverage and capacity of cellular system.(CO2,PO1,Understand)**

11. **If a signal-to-interference ratio of 15 dB is required for satisfactory forward channel performance of a cellular system, what is the frequency reuse factor and cluster size that should be used for maximum capacity if the path loss exponent is (1) n=4 (2) n=3 ? (Nov/Dec 2015) (CO2,PO1,Analyze)**

12. **A Cellular service provider decides to use a digital TDMA scheme which can tolerate a signal-to-interference ratio of 15 dB in the worst case. Find the optimal value of N for (1) Omnidirectional antennas (2) 120 ^{o} sectoring (3) 60° sectoring (4) Should sectoring be used? (Assume a path loss exponent of n =4 and consider trunking efficiency) (Nov/Dec 2015) (CO2,PO1,Apply)**

13. **A hexagonal cell within a four-cell system has a radius of 1.387 km. A total of 60 channels are used within the entire system. If the load per user is 0.029 erlangs and λ = 1 call/hour, Compute the following for an Erlang C system that has a 5 % probability of a delayed call:**
    (i) How many users per square kilometre will this system support?
    (ii) What is the probability that a delayed call will have to wait for more than 10 sec?
    (iii) What is the probability that a call will be delayed for more than 10 sec.
    [Data: From Erlang C chart for 5 % probability for delay with C = 15, traffic intensity = 9.0 erlangs] (Nov/Dec 2015) (CO2,PO1,Apply/Analyze)

14. **Summarise the features of various multiple access techniques used in wireless mobile communication. State the advantages and disadvantages of each technique. (May/June 2016) (CO2,PO1,Understand)**

15. **Explain in detail how to improve coverage and channel capacity in cellular systems. (CO2,PO1,Understand)**

(May/June 2016)

16. **Explain about co-channel interference and adjacent channel interference. (Nov/Dec 2016)**

(CO2,PO1,Understand)

17.Describe the techniques to avoid interference. (Nov/Dec 2016). (CO2,PO1,Understand)

18.Explain in detail how frequency is efficiently allocated in a cellular radio systems. (Nov/Dec 2016) (CO2,PO1,Understand)

19.Explain in detail a handoff scenario at cell boundary. (Nov/Dec 2016) (CO2,PO1,Understand)

20.Describe channel assignment strategies and Hand-off strategies. (Nov/Dec 2017) (CO2,PO1,Understand)

21.If a total 33 MHz of bandwidth is allocated to a particular FDD cellular telephone system which uses two 25kHz simplex channels to provide full duplex voice and control channels, compute the number of channels available per cell if a system uses (1) four-cell reuse (2) seven-cell reuse and (3) twelve-cell reuse. If a 1MHz of the allocated spectrum is dedicated to control channels, determine the equitable distribution of control channels and voice channels in each cell of each of the three systems. (Nov/Dec 2017) (CO2,PO1,Understand)

22.Derive the expressions for Cellular CDMA schemes for both noise limited and interference limit scenarios. (Nov/Dec 2017) (CO2,PO1,Understand)

23.Consider the Global System for Mobile, which is a TDMA/FDD system that uses 25 MHz for the forward link, which is broken into radio channels of 200 MHz. If 8 speech signals are supported on a single radio channel and if no guard band is assumed find the number of simultaneous users that can be accommodated in GSM. (Nov/Dec 2017) (CO2,PO1,Apply)

24.If GSM uses a frame structure where each frame consists of eight time slots, and each time slot contains 156.25 bits, and data is transmitted at 270.833 kbps in the channel, find (1) time duration of a bit (2) time duration of a slot (3) the time duration of a frame (4) how long must a user occupying a single time slot wait between two successive transmissions? (Nov/Dec 2017) (CO2,PO1,Apply)

25.Identify the channel capacity of TDMA in a cell system (Nov/Dec 2017) (CO2,PO1,Apply)

26.Write short note on i) Trunking ii) Grade of Service of Cell system (Nov/Dec 2017) (CO2,PO1,Understand)

27.Explain channel assignment and handoff strategies in detail. (April/May 2018) (CO2,PO1,Understand)

28.Consider a time invariant frequency selective block fading channel consisting of 3 subchannels of B=1MHz. The frequency response associated with each channel H_1=2;H_2=2;H_3=3. The transmit power constraint is P10mW and noise power spectral density is No = 10^{-9} W/Hz. Find the Shannon capacity of the channel and optimal power allocation that achieves this capacity. (April/May 2018) (CO2,PO2,Apply)

29. i)How is Hand-off in a cellular system implemented. Explain the different types of Hand-offs. (November/December 2018) (CO2, PO1, Understand)

ii)How can capacity of a cellular communication system be improved? Explain any two capacity expansion techniques. (November/December 2018) (CO2, PO1,Understand)

30.i) Compare and Contrast TDMA and CDMA. (November/December 2018) (CO2, PO1,Understand)
ii) Discuss the impact of interference in a cellular system and system capacity. (November/December 2018) (CO2,PO1,Understand)

31.i) Describe the principle of CDMA (April/May 2019) (CO2,PO1,Understand)
ii) Write a brief note on 1) Trunking
2)Cell Splitting
32. i)Illustrate the handoff scenario at cell boundary.(April/May 2019) (CO2,PO1,Understand)
ii) If a total of 33 MHz of bandwidth is allocated to a particular FDD cellular telephone system which uses two 25 kHz simplex/channels to provide full duplex voice and control channels, compute the number of channels available per cell if a system uses 1) 4-cell reuse 2) 7-cell reuse. (April/May 2019) (CO2,PO1,Apply)

33(i) Discuss your understanding on various multiple access techniques namely FDMA, TDMA and CDMA (April/May 2019) (CO2,PO1,Apply)
(ii) Highlight their advantage, disadvantage and uses in cellular communication (April/May 2021) (CO2,PO1,Apply)

34(i) Explain with neat sketch, Handoff mechanism adopted in cellular communication detailing the condition for proper handoff (April/May 2021) (CO2,PO1,Understand)

(ii)) Highlight the significance of prioritizing Handoffs and Practical Handoff consideration (April/May 2021) (CO2,PO1,Understand)

PART-C

1.If a total 33 MHz of bandwidth is allocated to a particular FDD cellular telephone system which uses two 25kHz simplex channels to provide full duplex voice and control channels, compute the number of channels available per cell if a system uses (1) four-cell reuse (2) seven-cell reuse and (3) twelve-cell reuse. If a 1MHz of the allocated spectrum is dedicated to control channels, determine the equitable distribution of control channels and voice channels in each cell of each of the three systems. (CO2,PO1,Apply)

2.If a signal-to-interference ratio of 15 dB is required for satisfactory forward channel performance of a cellular system, what is the frequency reuse factor and cluster size that should be used for maximum capacity if the path loss exponent is (1) n=4 (2) n=3 ? ((CO2,PO1,Analyze)

3.Derive the capacity of a cellular system using frequency reuse concept. (CO2,PO1,Apply)
4,Explain a handoff (or) handover scenario at cell boundary. Compare different types of

handoff techniques. (CO2,PO1,Understand)
5.Explain in detail a handoff scenario at cell boundary. (April/May 2021) (CO2,PO1,Understand)
6.Analyze the impact of both co-channel and adjacent chancel interference on system capacity in a cellular system. (April/May 2021) (CO2,PO2,Analyze)

EC 8652-Assignment – II

SET I

1. **Determine the capacity of a cellular system with S duplex channels, with each cell having a group of k channels (k<S). (CO2,PO1, Apply)**
2. **A total of 24 MHz of bandwidth is allocated to a particular FDD cellular telephone system that uses two 30 kHz simplex channels to provide full duplex voice and control channels. Find the number of channels in each for a 4-cell reuse system.(CO2,PO1,Apply)**

3. **A spectrum of 30 MHz is allocated to a wireless FDD cellular system which uses two 25 kHz simplex channels to provide full duplex voice and control channels, compute the number of channels available per cell if a system uses (a) four cell uses reuse (b) seven cell reuse and c) seven cell reuse. If 1 MHz of the allocates spectrum is dedicated to control channels. Determine an equitable distribution of control channels and voice channels in each cell for each of the three systems. (CO2,PO2,Apply)**
4. **For a given path loss exponent (a) n=4 ; b) n=3; find the frequency reuse factor and cluster size that should be used for maximum capacity. The signal-to-interference ratio of 15 dB is minimum required for satisfactory forward channel performance of cellular system. There are six co-channels in the firs tier and all of the them are at the same distance from the mobile. Use suitable approximations. (CO2,PO2,Apply).**
5. **What is the procedure to find the co-channel cells. (CO2,PO1,Remember).**

EC 8652-Assignment II

SET II

1. **Consider the downlink of a GSM system where carrier frequency is 950 MHz and receiver sensitivity is -102 dBm. The output power of TX amplifier is 30 W. The antenna gain of TX antenna is 10 dB and the aggregate attenuation of connectors, combiners is 5 dB. The fading margin is 12 dB and the breakpoint is at a distance of 100m, What distance can be covered.(CO2,PO1,Apply)**

2. **Consider a mobile radio system at 900 MHz carrier frequency and with 25-kHZ bandwidth that is affected only by thermal noise(temperature of Te=300 K). Antenna gains of TX and RX sides are 8 dB and -2 dB respectively. Losses in connectors, cables at TX are 2 dB. The noise figure of RX is 7 dB and 3 dB bandwidth of the signal is 25 kHz. The required operating SNR is 18 dB and the desired range of coverage is 2km. The breakpoint is 10 m**

distance beyond that point the path loss exponent is 3.8 and the fading margin is 10 dB. What is minimum TX power? (CO2,PO1,Apply).

3. In IS-95 digital cellular system, the bandwidth of the channel is 1.25 MHz, the transmission rate is 9600 bps and required SNR is in between 3 dB and 9 dB. Calculate the capacity for the given system.(CO2,PO1,Apply)

4. Discuss about ethical principles of signal transmission in a wireless channel (CO2,PO1,PO8,Remember)

5. If Bt is 12.5 MHz B guard is 10 kHz and Bc is 30 kHz, find the number of channels available in an FDMA system. (CO2,PO1, Apply)

EC 8652– Assignment II

SET III

1. In MATLAB simulate a flat fading channel experienced by a wireless communication system and comment on the obtained results (CO2,PO5,Apply)

2. In MATLAB simulate a frequency selective channel experienced by a wireless communication system. (CO2,PO5, Apply).

3. Consider Global System for Mobile which is a TDMA/FDD system that uses 25 MHz for the forward link, which is broken into radio channels of 200 kHz. If 8 speech channels are supported on a single radio channel and if no guard band is assumed, find the number of simultaneous users that can be accommodated in GSM. (CO2,PO1, Apply)

4. If GSM uses a frame structure where each frame consists of 8 time slots, and each time slot contains 156.25 bits and data is transmitted at 270.833 kbps in the channel. Find (a) the time duration of a bit (b) the time duration of a slot (c) the time duration of a frame and (d) how long a user occupying a single time slot must wait between two simultaneous transmissions. (CO2,PO1,Apply)

5. If a normal GSM time slot consists of 6 trailing bits, 8.25 guard bits, 26 training bits and 2 traffic bursts of 58 bits of data, find the frame efficiency.(CO2,PO1,Apply)

UNIT III
PART A

1. Define modulation. (CO3,PO1,Remember)

It is defined as the process by which some parameters of a high frequency signal termed as carrier, is varied in accordance with the signal to be transmitted.

2. What is demodulation? (CO3,PO1,Remember)

It is the process of recovering the original modulating signal from a modulated signal.

3. Write the advantages of digital modulation over analog modulation. (CO3,PO1,Remember)

Greater noise immunity, Robustness to channel impairments, Easier multiplexing of various forms of information, Greater security

4. What is meant by Binary Amplitude Shift Keying (BASK)? (CO3,PO1,Remember)

If amplitude of the carrier is varied depending on the incoming digital signal, then it is called Amplitude shift keying.

5. What is meant by Binary Frequency Shift Keying (BFSK)? (CO3,PO1,Remember)

If the frequency of the sinusoidal carrier frequency is varied depending on the incoming digital signal, then it is called Frequency shift keying.

6. What is meant by Binary Phase Shift Keying(BPSK)? (CO3,PO1,Remember)

If phase of the carrier is varied depending on the input digital signal, then it is called phase shift keying.

7. Define M-ary transmission system. (CO3,PO1,Remember)

In digital modulation instead of transmitting one bit at a time, two or more bits are transmitted simultaneously. This is called M-ary transmission.

8. What is Quadrature modulation? (CO3,PO1,Remember)

If two or more quadrature carriers are used for modulation then it is referred to as Quadrature modulation.

9. Explain the following terms a) Baud rate b) Bit rate (CO3,PO1,Remember)

Baud rate: Speed at which symbols are transmitted in a digital communication system, ie., no of symbols/second.

Bit rate: Speed at which data bits is transmitted in a digital communication system, ie no of bits/sec.

10. What is QAM? (CO3,PO1,Remember)

At high bit rates, a combination of BASK and BPSK is employed in order to minimize the errors in the received data. This method is known as Quadrature Amplitude Modulation (QAM). Quadrature Amplitude Modulation (QAM) is in which both the amplitude and phase of the transmitted signals are varied by the baseband signal.

11. What is meant by QPSK? (CO3,PO1,Remember)

Quadrature Phase Shift Keying (QPSK) is a multi level modulation in which four phase shifts are used for representing four different symbols.

12. What is linear modulation? (CO3,PO1Remember)

In linear modulation technique, the amplitude of the transmitted (carrier) signal varies linearly with the modulating digital signal. In general, linear modulation does not have a constant envelope.

13. Write the merits of linear modulation. (CO3,PO1Remember)

Bandwidth efficient, Very attractive for use in wireless communication systems, Accommodates more users within a limited spectrum.

14. What is non linear modulation? (CO3,PO1,Remember)

In non linear modulation, the amplitude of the carrier is constant regardless of the variation in the modulating signal.

15. Mention the merits and demerits of non linear modulation. (CO3,PO1,Remember)

Merits:

1. Lower efficient Class C amplifiers are used without introducing degradation in the spectrum occupancy of the transmitted signal.
2. Low out of band radiation of the order of -60dB to -70dB can be achieved.
3. Limiter-discriminator detection can be used, which simplifies receiver design and provides high immunity against random FM noise and signal fluctuations due to Rayleigh fading.

Demerits:

1. Constant envelope modulations occupy a larger bandwidth than linear modulation scheme
2. In situations where bandwidth efficiency is more important than power efficiency, constant envelope modulation is not well suited.

16. What is the advantage of MSK over QPSK? (CO3,PO1,Understand)

In QPSK the phase changes by 90 degrees or 180 degrees. This creates abrupt amplitude variations in the waveform. Therefore bandwidth requirement of QPSK is more. Minimum Shift

Keying(MSK) overcomes this problem in which the output waveform is continuous in phase hence there are no abrupt changes in amplitude.

17. Why MSK is called as fast FSK? (CO3,PO2,Understand)

MSK is called fast FSK, as the frequency spacing used is only half as much as that used in conventional non-coherent FSK.

18. Mention some merits of MSK. (CO3,PO1,Remember)

Constant envelope, Spectral efficiency, Good BER performance and Self-synchronizing capability

19. Why MSK cannot be directly used in multi user communications? (CO3,PO1,Understand)

1. The main lobe of MSK is wider. This makes MSK unsuitable for the applications where it is having extremely narrow bandwidths and sharp cut-offs are required.
2. Slow decay of MSK power spectral density curve creates adjacent channel interference. Hence MSK cannot be used for multiuser communications.

20. What is the need of Gaussian filter? (CO3,PO2,Understand)

Gaussian filters are used before the modulator to reduce the transmitted bandwidth of the signal. It uses less bandwidth than conventional FSK.

21. Give some examples of linear modulation. (CO3,PO1,Remember)

Pulse shaped QPSK, Offset PSK(OQPSK), π/4QPSK

22. Give some examples for constant envelope modulation. (CO3,PO1,Remember)

BFSK, MSK, GMSK

23. Define QAM. (CO3,PO1,Remember)

Quadrature Amplitude Modulation refers to transmitting the information in quadrature phaseshifts and amplitude in accordance with the message data bits.

24. Define M-ary FSK. (CO3,PO1,Remember)

In M-ary system, M=2N different symbols are used and N no of bits per symbol. Every symbol uses separate frequency for transmission.

25. Write the applications of MFSK and OFDM. (CO3,PO1,Remember)

They are used for high speed data connections as part of the IEEE 802.11a standards activities to provide 54 Mbps WLAN connections, as well as for high speed line of sight and non line of sight connections for Multi channel Multipoint Distribution service (MMDS) operation.

26. What are the modulations suitable for frequency selective mobile channels? (CO3,PO1,Remember)

Both filtered and unfiltered BPSK, QPSK, OQPSK and MSK modulations are suitable for frequency selective mobile channels.

27. Draw the mathematical link model for analysis of modulation scheme. (CO3,PO1,Remember)

The block diagram shown below gives the mathematical link model for analysis of modulation scheme.

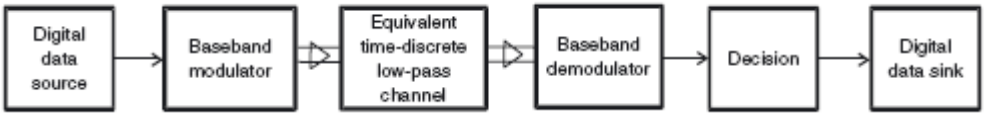

28. List the advantages of QPSK (CO3,PO1,Remember)

Higher Data Rate and Conservation of bandwidth are the advantages of QPSK.

29. Differentiate between MSK and GMSK (CO3,PO1,Understand)

MSK : It has smoother waveforms than QPSK scheme, Constant envelope, main lobe is wider contains 99% signal energy, good spectral efficiency

GMSK : Simple binary modulation scheme, Premodulation is done by Gaussian pulse shaping filter so side lobe levels are much reduced, Excellent power efficiency and spectral efficiency

31. Mention any two criteria for choosing a modulation technique for a specific wireless application? (CO3,PO1,Understand)

- A desirable modulation scheme provides low bit error rates at low received SNR
- Better Performance in multipath fading conditions.
- Minimum bandwidth is occupied
- Easy implementation and low cost.

32. Draw the structure of a generic optimum receiver. (CO3,PO1,Understand)

The following block diagram shown below provides the structure of a generic optimum receiver.

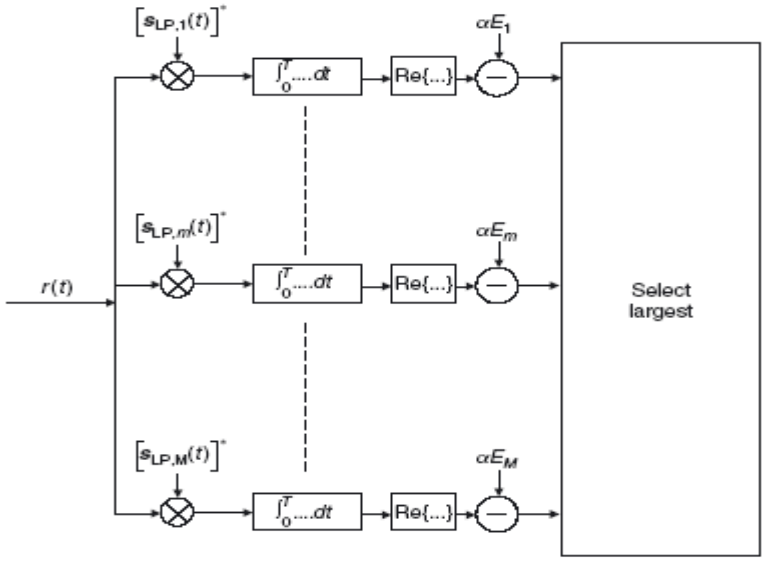

33. Give the expression for bit error probability of Gaussian Minimum Shift Keying (GMSK) (CO3,PO1,Remember)

Bit error probability for MSK is $P_e(MSK) = \frac{1}{2} erfc\left(\sqrt{\frac{E_b}{N_o}}\right)$; Symbol error rate is $P_e = erfc\left(\sqrt{\frac{E_b}{N_o}}\right)$

34. What is Orthogonal Frequency Division Multiplexing (OFDM)? (CO3,PO1,Remember)

Orthogonal frequency division multiplexing splits the information into N parallel streams, which are then transmitted by modulating N distinct carriers.

35. Define Cyclic Prefix (CP). (CO3,PO1,Remember)

In OFDM, delay dispersion leads to a loss of orthogonality between the subcarriers and thus leads

to Inter Carrier Interference (ICI). These negative effects can be eliminated by a special type of guard interval called the cyclic prefix.

36. Define Windowing. (CO3,PO1,Remember)

OFDM signal has sharp phase transition caused by modulation at symbol boundaries. Increasing the number of subcarriers in OFDM causes the spectrum to reduce rapidly in the beginning as the sidelobes are closer together. Windowing an OFDM symbol makes amplitude to go smoothly to zero at symbol boundaries. A commonly used window type is raised cosine type window which is given as

$$w(t) = \begin{cases} 0.5 + 0.5\cos(\pi + t\pi/(\beta T_s)) & 0 \le t \le \beta T_s \\ 1.0 & \beta T_s \le t \le T_s \\ 0.5 + 0.5\cos((t - T_s)\pi/(\beta T_s)) & T_s \le t \le (1+\beta)T_s \end{cases}$$

37. What is PAPR (CO3,PO1,Remember)

Peak-to-Average Power Ratio (PAPR) originates due to an OFDM signal is the superposition signals on different subcarriers. On average the emitted power is linearly proportional to N. Sometimes signals on the subcarriers add up constructively so that the amplitude of the signal is proportional to N and the power goes up to N^2.

38. Find the 3-dB bandwidth for a Gaussian low pass filter used to produce 0.25 GMSK with a channel data rate R_b = 300 kbps. (Nov/Dec 2015). (CO3,PO1,Apply)

The time period T= 1/Rb = 3.7 µsecs; Solving for V, BT = 0.25 ; TB = 0.25/T = 0.25/3.7 µsecs; = 67.56 kHz. The 3-dB bandwidth is 67.56 kHz. The 90% power bandwidth in RF channel is = 0.57 x Rb = 0.57 x 270 kbps = 153.9 kHz.

39. An 900 MHz carrier signal is frequency modulated using a 100 kHz sinusoidal modulating waveform. The peak deviation of the FM signal is 500 kHz. If this FM signal is received by a superheterodyne receiver having an IF frequency of 5 MHz, determine the IF bandwidth necessary to pass the signal. (Nov/Dec 2015) (CO3,PO1,Apply)

Modulating frequency fm = 100 kHz; Frequency Deviation $\Delta_f = 500\,kHz$; Modulation index $\beta_f = \frac{\Delta_f}{f_m} = \frac{500}{100} = 5$; Using Carson's rule , the Bandwidth occupied by the FM signal is given by $\beta_T = 2(\beta_T + 1) f_m = 2(5+1)100\,kHz = 1200\,kHz$;

The lower bound channel bandwidth = $2\Delta_f = 2 \times 500\,kHz = 1000\,kHz$. Hence the filter can be designed for a bandwidth of upper bound 1200 kHz and lower bound bandwidth of 1000 kHz.

40. Why is MSK referred to as fast FSK. (May/June 2016). (CO3,PO1,Understand)

MSK is called fast FSK, as the frequency spacing used is only half as much as that used in conventional non-coherent FSK.

41. What is windowing. (May/June 2016) (CO3,PO1,Remember)

OFDM signal has sharp phase transition caused by modulation at symbol boundaries. Increasing the number of subcarriers in OFDM causes the spectrum to reduce rapidly in the beginning as the sidelobes are closer together. Windowing an OFDM symbol makes amplitude to go smoothly to zero at symbol boundaries. A commonly used window type is raised cosine type window which is given as

$$w(t) = \begin{cases} 0.5 + 0.5\cos(\pi + t\pi/(\beta T_s)) & 0 \le t \le \beta T_s \\ 1.0 & \beta T_s \le t \le T_s \\ 0.5 + 0.5\cos((t - T_s)\pi/(\beta T_s)) & T_s \le t \le (1+\beta)T_s \end{cases}$$

42.Give the function of Gaussian filter in GMSK. (Nov/Dec 2016) (CO3,PO1,Remember)

Gaussian filters are used in GMSK before the modulator to reduce the transmitted bandwidth of the signal. It uses less bandwidth than conventional FSK.

43.What is Cyclic Prefix (Nov/Dec 2016) (CO3,PO1,Remember)

In OFDM, delay dispersion leads to a loss of orthogonality between the subcarriers and thus leads to Inter Carrier Interference (ICI). These negative effects can be eliminated by a special type of guard interval called the cyclic prefix.

44.What is the basic advantage of using Multicarrier schemes such as OFDM? (April/May 2017) (CO3,PO1,Remember)

MultiCarrier Modulation (MCM) provides a way of increasing the bandwidth while being able to tolerate the varying fading conditions present.

A further advantage of multicarrier systems is that they are less susceptible to interference than single carrier system as interference may only affect a small number of the carriers.

45. State any two advantages of MSK (April/May 2017) (CO3,PO1,Remember)

Reduced Bandwidth, no interference to adjacent channel bandwidth

No phase discontinuities because the frequency changes occur at the carrier zero crossing points.

46.Define Offset QPSK and pi/4 differential QPSK (April/May 2017) (CO3,PO1,Understand)

In order to improve peak-to-average ratio in QPSK is to make sure that bit transitions for the in-phase and quadrature phase components occur at different time instants. This method is Offset QPSK(OQPSK) or Staggered QPSK or modified form of QPSK.

47.Define PAPR. (April/May 2017) (CO3,PO1,Remember)

Peak-to-Average Power Ratio (PAPR) originates due to an OFDM signal is the superposition signals on different subcarriers. On average the emitted power is linearly proportional to N.

Sometimes signals on the subcarriers add up constructively so that the amplitude of the signal is proportional to N and the power goes up to N^2.

48. What do you mean by Cyclic Prefix. (April/May 2018) (CO3,PO1,Remember)

In OFDM, delay dispersion leads to a loss of orthogonality between the subcarriers and thus leads to Inter Carrier Interference (ICI). These negative effects can be eliminated by a special type of guard interval called the cyclic prefix

49. Draw the constellation diagram for offset QPSK modulation scheme. (April/May 2018) (CO3,PO1,Understand)

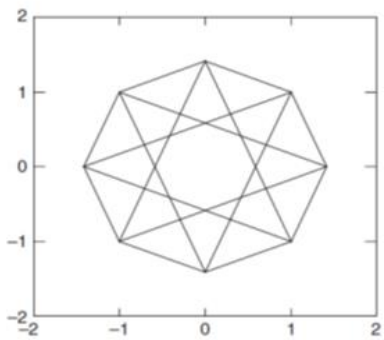

Figure I–Q diagram of a $\pi/4$-differential quadrature-phase shift keying signal with rectangular basis functions.

50. Define PAPR. Is it high or low in OFDM. (November/December 2018) (CO3,PO1,Understand)

Peak-to-Average Power Ratio (PAPR) originates due to an OFDM signal is the superposition signals on different subcarriers. On average the emitted power is linearly proportional to N. Sometimes signals on the subcarriers add up constructively so that the amplitude of the signal is proportional to N and the power goes up to N^2.

51. State the advantages of GMSK (November/December 2018) (CO3,PO1,Understand)

- The sidebands of PSK modulated spectrum is minimized by this modulation technique. Hence sideband power is reduced.
- The MSK or GMSK spectrum is less affected by noise and hence leads to good SNR. This helps in achieving very stable and long distance communication. Due to this fact, the GMSK modulation technique is being employed in GSM technology.
- Above fact, helps in achieving good receiver sensitivity.
- PAPR is maintained low due to no phase continuities and occurrence of frequency changes at zero cross over of RF carrier. Due to this, highly linear PA (Power Amplifier) is not required.
- Spectral efficiency is better and higher while demodulator is less complex.
- GMSK provides constant envelope over the entire bandwidth. Hence it offers excellent power efficiency.
- It provides good BER performance.

- GMSK offers self synchronizing capabilities.
- GMSK is good choice for voice modulation.

52. List the features of offset QPSK. (November/December 2018) (CO3,PO1,Understand)
The big advantage of OQPSK is to suppress out-of-band interference.
The OQPSK will limit the phaseshift to not more than 90° at a time.
This yields much lower amplitude fluctuations than non-offset QPSK .

53.Why GMSK is used in Cellular communication (April/May 2021) (CO3,PO1,Understand)
GMSK spectrum is less affected by noise and hence leads to good SNR. This helps in achieving very stable and long distance communication. Due to this fact, the GMSK modulation technique is being employed in GSM technology namely cellular communication.

54.How OFDM differ from FDM (April/May 2021) (CO3,PO1,Understand)

OFDM uses orthogonal subcarriers for transmission of information whereas FDM uses carrier for transmitting information which are not orthogonal

PART B

1. **With diagrams explain digital modulation transmitter and receiver with neat block diagram. (CO3,PO1,Understand)**
2. **Discuss about QPSK transmitter and receiver with signal space diagram and give an expression for spectral efficiency. (CO3,PO1,Understand)**
3. **Explain π/4QPSK transmitter and receiver with signal space diagram and give an expression for spectral efficiency. (CO3,PO1,Understand)**
4. **Explain offset QPSK transmitter and receiver with signal space diagram and give an expression for spectral efficiency. (CO3,PO1,Understand)**
5. **Explain BFSK transmitter and receiver with signal space diagram and give an expression for spectral efficiency. (CO3,PO1,Understand)**
6. **List the advantages and applications of BFSK. (CO3,PO1,Understand)**
7. **What is MSK. Explain its MSK transmitter and receiver with signal space diagram and give an expression for power spectral density. (CO3,PO1,Understand)**
8. **Explain GMSK transmitter and receiver with signal space diagram and give an expression for spectral efficiency. (CO3,PO1,Understand)**
9. **Discuss about the performance of digital modulation in flat fading channels. (CO3,PO1,Understand)**
10. **Discuss about the performance of digital modulation in frequency selective fading channels.(CO3,PO1,Understand)**
11. **Explain about orthogonal frequency division multiplexing with diagrams. (CO3,PO1,Understand)**
12. **Expalin cyclic prefixing in OFDM systems (CO3,PO1,Understand)**
13. **Explain Windowing techniques in OFDM system (CO3,PO1,Understand)**
14. **Brifely explain Peak Average Power Ratio (PAPR) in OFDM system. (CO3,PO1Understand)**
15. **Explain in detail about Gaussian Minimum Shift Keying (GMSK) Transmission and**

Reception with necessary block diagrams (Nov/Dec 2015) (CO3,PO1,Understand)

16. **A zero mean sinusoidal message is applied to a transmitter that radiates an AM signal with 10 kW power. Compute the carrier power if the modulation index ix 0.6. What percentage of the total power is in the carrier? Calculate the power in each sideband. (Nov/Dec 2015). (CO3,PO1,Apply)**
17. **Derive the expression for MSK signal as a special type of continuous phase FSK signal. (Nov2015/Dec 2015). (CO3,PO1,Apply)**
18. **Explain in detail Offset QPSK and pi/4 –DQPSK linear digital modulation techniques employed in wireless communication. (May/June 2016) (CO3,PO1,Understand)**
19. **Explain in detail Gaussian Minimum Shift Keying (GMSK) transmission and reception with necessary diagrams. (May/June 2016) (CO3,PO1,Understand)**

20. **What is MSK? Also derive the expression of MSK signal as a special type of FSK signal and explain its power spectral density. (Nov/Dec 2016) (CO3,PO,Understand/Apply)**

21 **Draw the basic arrangement of Orthogonal Frequency Division Multiplexing transceivers and discuss its overall operation. (Nov/Dec 2016) (CO3,PO, Understand)**

22**Why are constant envelope modulation schemes such as MSK and GMSK used in a wireless communication system? Compare and contrast these two modulation techniques. (April/May 2017) (CO3,PO1,Understand)**

23**Describe OFDM scheme and state the reason behind using cyclic prefix in OFDM System. What is PAPR? Why is it normally larger in OFDM technique(April/May 2017) (CO3,PO1,Understand)**

24**Discuss the error performance of difference modulation schemes in fading channels. (April/May 2017) (CO3,PO1,Understand)**

25**What is Offset-QPSK? What is advantage? Describe the Offset-QPSK scheme. (April/May 2017) (CO3,PO1,Understand)**

26**Describe with neat diagram, the modulation technique of QPSK (Nov/Dec 2017) (CO3,PO1,Understand)**

27**List the advantages and applications of BFSK. (Nov/Dec 2017) (CO3,PO1,Understand)**

28**Examine the principle of MSK modulation and derive the expression for power spectral density. (Nov/Dec 2017) (CO3,PO1,Understand)**

29. **Prove that OFDM system converts delay spread channel into a set of parallel fading channels, using the concept of cyclic prefix. (April/May 2018) (CO3,PO2,Evaluate)**

30. **Derive the bit error rate for binary phase shift keying modulation for frequency flat fading channels. (April/May 2018) (CO3,PO1,Apply)**

31. With neat block diagram, explain the OFDM transmitter and receiver. List out its advantages and disadvantages. (November/December 2018) (CO3,PO1,Understand)

32. i)Explain the MSK system and its importance in a wireless communication system. (November/December 2018) (CO3,PO1,Understand)
ii)Why is O-QPSK preferred in wireless communication system? Justify. (November/December 2018) (CO3,PO1,Understand)
33. State the principle and describe the working of pi/4 QPSK transmitter with a neat diagram. (April/May 2019) (CO3,PO1,Understand)

34. i)Explain the principle of OFDM by comparing it with FDMA with sketch. (April/May 2019) (CO3,PO1,Understand)
ii) Discuss any four reasons for the physical cause of error floors in delay and frequency dispersive fading channels. (April/May 2019) (CO3,PO1,Understand)

35(i) OFDM is more popularly used in advanced wireless communication" – Justify with proper explanation detailing the working Principle, cyclic prefix, implementation structure (April/May 2021) (CO3,PO1,Understand)
(ii) State the significance of windowing and PAPR(April/May 2021) (CO3,PO1,Understand)

36(i) Explain the working mechanism of transmitter and receiver block of MSK modulationtechnique. (April/May 2021) (CO3,PO1,Understand)
(ii) State the salient features observed in the power spectral density of MSK when compared with QPSK and OQPSK. (April/May 2021) (CO3,PO1,Understand)

PART-C

1. **With neat diagrams, explain the modulation and demodulation of pi/4 DQPSK modulation technique. (April/May 2018)(CO3,PO1,Understand)**
2. **Describe OFDM scheme and state the reason behind using cyclic prefix in OFDM System. What is PAPR? Why is it normally larger in OFDM technique.**
3. **Explain in detail Gaussian Minimum Shift Keying (GMSK) transmission and reception with necessary diagrams. (CO3,PO1,Understand)**

4.. Prove that OFDM system converts delay spread channel into a set of parallel fading channels, using the concept of cyclic prefix. (CO3,PO2,Evaluate)
5.Discuss the error performance of difference modulation schemes in fading channels. (CO3,PO1,Understand)
6.Determine the error probability for different fading channels with diversity reception. (April/May 2018) (CO3,PO1, Apply)
7.With neat diagram, explain the modulation and demodulation of pi/ DQPSK modulation technique. (April/May 2018) (CO3,PO1,Understand)
8.Explain the principle of a pi/4 DQPSK scheme and compare it with traditional QPSK scheme. (November/December 2018) (CO3,PO1,Understand)

(Regulations 2017 for VI SEM ECE)

EC 8652 - ASSIGNMENT –III
SET-I

1. Write a MATLAB program for observing constellation diagram of BPSK and QAM signals(CO3,PO5,Apply)

2 Write a MATLAB program for observing the output of FSK, PSK and DPSK signals(CO3,PO5,Apply)

3. Write a MATLAB program for simulating Bit Error Rate of Binary Phase Shift Keying(BPSK) scheme in AWGN Channel.(CO3,PO5,Apply)

4. Write a MATLAB program for simulating Bit Error Rate of Binary Amplitude Shift Keying(BPSK) scheme in AWGN Channel.(CO3,PO5,Apply)

5. Write a MATLAB program for simulating Bit Error Rate of Binary Frequency Shift Keying(BFSK) scheme in AWGN Channel.(CO3,PO5,Apply)

EC 8652-ASSIGNEMENT III
SET-II

1. In MATLAB, simulate Bit Error Rate (BER) performance of a Binary Phase Shift Keying (BPSK) Digital Modulation scheme in flat fading channels.(CO3,PO5, Apply).
2. Derive the probability of error of BPSK digital modulation scheme in Additive White Gaussian Noise Channel. (CO3,PO1,Apply)

3. A zero mean sinusoidal message is supplied to a transmitter that radiates an AM signal with 10 kW power. Compute the carrier power if the modulation index is 0.6. What percentage of the total power is in the carrier? Calculate the power in each sideband (CO3, PO1, Apply)

4. A sinusoidal modulating signal, m(t) = 4 cos 2Π 4 x 10 3 t, is applied to an FM modulator that has a frequency deviation constant gain of 10 kHz/V. Compute (a) the peak frequency deviation and (b) the modulation index (CO3, PO1,Apply)

5. An 880 MHz carrier signal is frequency modulated using a 100 kHz sinusoidal modulating waveform. The peak deviation of the FM signal is 500 kHz. If this FM signal is receive by a superheterodyne receiver having an IF frequency of 5 MHz, determine the IF bandwidth necessary to pass the signal. (CO3, PO1, Apply)

EC 8652-ASSIGNEMENT III
SET-III

1. Compute the ratio of signal power to adjacent channel interference when using (i) raised cosine pulses (ii) root-raised cosine pulses with $\alpha = 0.5$ when the two considered signals have center frequencies 0 and 1.25/T(CO3,PO1,Apply)

2. Compute the BER of binary FSK in an AWGN channel with $\gamma B = 5$ dB and compare it with Differential Binary Phase Shift Keying (DBPSK) and BPSK. (CO3,PO2,Analyze)

3.In MATLAB, simulate Bit Error Rate (BER) performance of a Binary Frequency Shift Keying (BFSK) Digital Modulation scheme (CO3,PO5,Apply)

4. In MATLAB, simulate Bit Error Rate (BER) performance of a Binary Phase Shift Keying (BPSK) Digital Modulation scheme (CO3,PO5,Apply).

5. In MATLAB, simulate Bit Error Rate (BER) performance of a Quadrature Phase Shift Keying (QPSK) Digital Modulation scheme (CO3,PO5,Apply).

UNIT IV
PART A

1. What is equalizer? What is the need of equalization? (CO4,PO1,Remember)
The device which equalizes the dispersive effect of a channel is referred to as an equalizer. Equalization is used to compensate the inter-symbol interference created by multipath within time dispersion channel.

2. Define adaptive equalizer. (CO4,PO1Remember)
To combat ISI, the equalizer coefficients changes according to the channel status so as to track the channel variations. Such an equalizer is called an adaptive equalizer since it adapts to the channel variations.

3. What are the operating modes available in an adaptive equalizer? (CO4,PO1,Remember)
Training and tracking modes.

4. What is training mode in an adaptive equalizer? (CO4,PO1,Remember)
First, a known fixed length training sequence is sent by the transmitter, then the receiver's equalizer adapts to a proper setting of minimum bit error rate detection, where the training sequence is pseudorandom binary signal or a fixed and prescribed bit pattern.

5. What is tracking mode in an adaptive equalizer? (CO4,PO1,Remember)
Immediately following the training sequence, the user data is sent, and the adaptive equalizer at the receiver utilizes a recursive algorithm to evaluate the channel and estimate filter coefficients to compensate for the distortion created by multipath in the channel.

6. Write a short note on i)linear equalizers ii)non-linear equalizers (CO4,PO1,Remember)
If the output is not used in the feedback path to adapt, then this type of equalizer is called linear equalizer. If the output is fed back to change the subsequent outputs of the equalizer, this type of equalizer is called non linear equalizers.

7. Write the advantages of lattice equalizer. (CO4,PO1,Remember)
It is simplest and easily available, Numerical stability, Faster convergence, Unique structure of the lattice filter allows the dynamic assignment of the most effective length of the lattice equalizer and When the channel becomes more time dispersive, the length of the equalizer is increased by the algorithm without stopping the operation of the equalizer.

8. Mention the disadvantages of lattice equalizer. (CO4,PO1,Remember)
1. If the channel is not very time dispersive, only a fraction of stages are used.
2. It is more complicated than a linear transversal equalizer.

9. Why nonlinear equalizers are preferred? (CO4,PO1,Understand)
The linear equalizers are very effective in equalizing channels where ISI is not severe. The severity of ISI is directly related to the spectral characteristics. In this case there are spectral nulls in the transfer function of the effective channel, the additive noise at the receiver input will be

dramatically enhanced by the linear equalizer. To overcome this problem, non linear equalizers are used.

10. What are the nonlinear equalization methods used? (CO4,PO1,Remember)

Decision Feedback Equalization (DFE), Maximum likelihood Symbol Detection and Maximum Likelihood Sequence Estimation (MLSE).

11. Where are DFEs are used? (CO4,PO1,Remember)

DFE is particularly useful for channels with severe amplitude distortions and is widely used in wireless communications.

12. What are the factors used in adaptive algorithms? (CO4,PO1, Remember)

Rate of convergence, Misadjustment, Computational complexity and numerical properties.

13. Define rate of convergence. (CO4,PO1,Remember)

The no of iterations required for the algorithm in response to stationary inputs to converge close enough to the optimum solution.

14. Write the basic algorithms used for adaptive equalization. (CO4,PO1,Remember)

Zero forcing algorithm (ZF), least mean square algorithm (LMS) and recursive least square algorithm (RLS).

15. Write the advantages of LMS algorithm. (CO4,PO1,Remember)

It maximizes the signal to distortion at its output within the constraints of the equalizer filter length, Low computational complexity and Simple program

16. Write the advantages of RLS algorithm. (CO4,PO1,Remember)

Fast convergence, Good tracking ability

17. Explain Diversity concept. (CO4,PO1,Understand)

If one radio path undergoes a deep fade, another independent path may have a strong signal. By having more than one path to select from, both the instantaneous and average SNRs at the receiver may be improved.

18. What are the techniques used to improve the received signal quality? (CO4,PO1,Remember)

Equalization, Diversity and Channel coding

19. Write the functions of diversity. (CO4,PO1,Remember)

Diversity is used to compensate for fading channel impairments, and is usually implemented by using two or more receiving antennas. Diversity improves transmission performance by making use of more than one independently faded version of the transmitted signal.

20. Define spatial diversity. (CO4,PO1,Remember)

The most common diversity technique is called spatial diversity, whereby multiple antennas are strategically spaced and connected to a common receiving system. While one antenna sees a signal null, one of the other antennas may see a signal peak, and the receiver is able to select the antenna with the best signals at any time.

21. List out the types of Diversity. (CO4,PO1,Remember)

Space diversity, Polarization diversity, Time diversity, Frequency diversity

22. What is the need for diversity schemes? (CO4,PO1,Understand)

To increase signal to noise ratio, For error free digital transmission, To degrade the bit error probability.

23. What are the two main classifications of diversity techniques? (CO4,PO1,Remember)

Microscopic diversity and Macroscopic diversity

24. List out the four types of Combining Methods. (CO4,PO1,Remember)

Selection combining, switched combining, Equal gain combining, Maximum ratio combining

25. If a digital signal processing chip can perform one million multiplications per second, determine the time required between each iteration for the following adaptive equalizer algorithms. (Nov/Dec 2015) (CO4,PO1,Understand)

(a) Square root RLS DFE

(b) Gradient lattice DFE

Time required for each iteration is 1 millisecond for Square root RLS DFE and 1 microsecond for Gradient Lattice DFE.

26. Draw the structure of a linear transversal equalizer. (Nov/Dec 2015) (CO4,PO1,Understand)

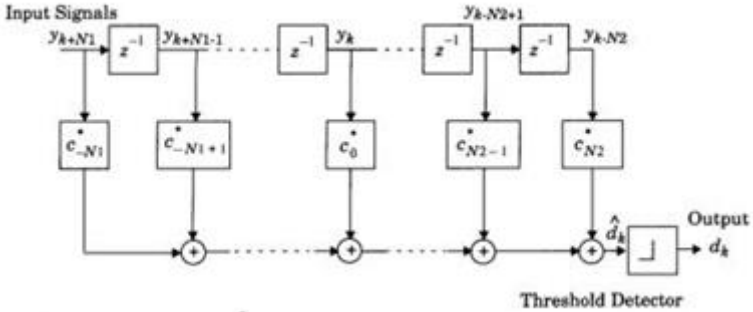

27.Define Adaptive Equalization (May/June 2016) (CO4,PO1,Remember)

To combat ISI, the equalizer coefficients changes according to the channel status so as to track the channel variations. Such an equalizer is called an adaptive equalizer since it adapts to the channel variations.

28. What are the benefits of RAKE Receiver (May/June 2016) (CO4,PO1,Remember)

RAKE Receiver collects time shifted versions of the original signal by providing a separate correlation receiver for each of the multipath signals.

29.Why are linear equalizers and nonlinear equalizers used. (Nov/Dec 2016) (CO4,PO1,Understand)

Linear and Nonlinear Equalizers are used reduce InterSymbol Interference(ISI)

30.What is Macrodiversity. (Nov/Dec 2016) (CO4,PO1,Remember)

Macrodiversity is defined as the diversity which mitigates the effects of shadowing from buildings and objects. Macrodiversity combats large scale fading which arises due to shadowing effects.

31.Why is an Adaptive Equalizer required. (April/May 2017) (CO4,PO1,Remember)

Adaptive Equalizers are used to combat ISI, the equalizer coefficients changes according to the channel status so as to track the channel variations. Such an equalizer is called an adaptive equalizer since it adapts to the channel variations.

32.What is diversity? Why is it employed? (April/May 2017) (CO4,PO1,Remember)

Diversity is a technique by which the same information is transmitted and received in space, time,

frequency, antenna and polarization. Diversity is used to compensate for fading channel impairments, and is usually implemented by using two or more receiving antennas. Diversity improves transmission performance by making use of more than one independently faded version of the transmitted signal.

33.Define Spatial Diversity (Nov/Dec 2017) (CO4,PO1,Remember)

The most common diversity technique is called spatial diversity, whereby multiple antennas are strategically spaced and connected to a common receiving system. While one antenna sees a signal null, one of the other antennas may see a signal peak, and the receiver is able to select the antenna with the best signals at any time.

34. Define STCM. (Nov/Dec 2017) (CO4,PO1,Remember)

Space Trellis Coded Modulation (or) Space Time Coded Modulation is a technique which uses changes in space and used trellis code tree concepts for transmission and reception of information data.

35. Distinguish between diversity gain versus array gain. (April/May 2018) (CO4,PO2,Understand)

S. No.	Diversity Gain	Array Gain (Power Gain)
1	Diversity gain is the change in slope of the probability of error due to diversity	Array gain is the gain in SNR from noise averaging over the multiple antennas
2	Only applies to fading channels.	Gain in both AWGN and fading channels
3	Average probability of error $\bar{P}_s = c\bar{\gamma}^{-M}$	SNR increase in the absence of fading $A_g = \frac{\bar{\gamma}_\Sigma}{\bar{\gamma}}$

12. List different types of diversity schemes. (April/May 2018)

a)Macro Diversity

b)Micro Diversity

Spatial diversity,
Polarization diversity,
Temporal diversity,
Frequency diversity,
Angular diversity.

36.Distinguish linear and non-linear equalization. (November/December 2018) (CO4,PO2,Understand)

If the output is not used in the feedback path to adapt, then this type of equalizer is called linear equalizer. If the output is fed back to change the subsequent outputs of the equalizer, this type of equalizer is called non linear equalizers.

37. What is Macro Diversity. (November/December 2018) (CO4,PO1,Understand)

Macrodiversity is defined as the diversity which mitigates the effects of shadowing from buildings and objects. Macrodiversity combats large scale fading which arises due to shadowing effects.

38. Name the three techniques used to improve the received signal quality. (November/December 2018) (CO4,PO1,Understand)

Three techniques are **used** to **improve** Rx **signal quality** and lower BER: 1) Equalization(BW > BWc) 2) Diversity **3**) Channel Coding

39. List out the factors that influence the performance of adaptive equalization algorithms (April/May2021) (CO4,PO1,Understand)
Rate of convergence, Misadjustment, Computational complexity and numerical properties.

40.Assume 5 branch diversity is used, where each branch receives an independent Rayleigh fading signal . If the average SNR is 20 dB, determine the probability that the SNR will drop below 10 dB (April/May2021) (CO4,PO1,Understand)

threshold $\gamma = 10\,dB$,

Avg SNR $\Gamma = 20\,dB$

Soln:

(Probability that the SNR of all branches will drop below the threshold)

Probability that single branch has $\gamma_i < \gamma$ is

$$P_r[\gamma_i \le \gamma] = (1 - e^{-\gamma/\Gamma})$$

If single branch achieves SNR $> \gamma$, then probability . SNR $> \gamma$ for one or more branches.

$$P_r[\gamma_i > \gamma] = 1 - P_M(\gamma)$$

$$= 1 - (1 - e^{-\gamma/\Gamma})^M$$

$$\frac{\gamma}{\Gamma} = \frac{10\,dB}{20\,dB}$$

$$= \frac{10/10}{20/10} = \frac{1}{2} = \frac{\text{antilog}(1)}{\text{antilog}(2)} = \frac{10}{100} = 0.1$$

$$\frac{\gamma}{\Gamma} = 0.1$$

No diversity $(M = 1)$

$$P_\gamma(\gamma_i < \gamma) = (1 - e^{-0.1})^1 = P_1(10\,dB)$$

$$= 0.095$$

$$P_4(10\,dB) = (1 - e^{-0.1})^4$$

$$= 8.2009 \times 10^{-5}$$

$$= 0.000082009$$

Mean SNR:-

$$\bar{\gamma} = \Gamma \sum_{k=1}^{M} \frac{1}{k}$$

PART B

1. **Explain the classification of equalizers. Briefly explain about linear equalizers**. (**CO4,PO1,Understand**)
2. **With diagram, discuss about Decision Feedback Equalization (DFE). (CO4,PO1,Understand)**
3. **Explain about Minimum Mean Square Error (MMSE) equalizer.** (**CO4,PO1,Understand**)
4. **Explain the operation of an adaptive equalizer at the receiver side. (CO4,PO1,Understand)**
5. **Discuss about the performance factors of an adaptive algorithm. (CO4,PO1,Understand)**
6. **Explain Least Mean Square (LMS) algorithm in detail. (CO4,PO1,Understand)**
7. **Explain Recursive Least Squares (RLS) algorithm in detail. (CO4,PO1,Understand)**
8. **Discuss about space diversity with neat diagram. (CO4,PO1,Understand)**
9. **Explain about theoretical model for polarization diversity. (CO4,PO1,Understand)**
10. **With a neat block diagram, explain the principle of Macrodiversity (CO4,PO1,Understand)**
11. **Explain with block diagram, Maximal Ratio Combiner (MRC). (CO4,PO1,Understand)**
12. **Describe on Polarization and Space Diversity. (CO4,PO1,Understand)**
13. **Discuss the performance of a RAKE receiver. (CO4,PO1,Understand)**
14. **Derive error performance in flat fading channels with diversity reception (CO4,PO1,Apply)**
15. **Derive error performance in frequency fading channels with diversity reception. (CO4,PO1Apply)**

16. Consider a single branch Rayleigh fading signal has a 20% chance of being 6 dB below some mean SNR threshold.

(i) Determine the mean of the Rayleigh fading signal as referenced to the threshold.
(ii) Find the likelihood that a two branch selection diversity receiver will be 6 dB below the mean SNR threshold.
(iii) Find the likelihood that a three branch selection diversity receiver will be 6 dB below the mean SNR threshold
(iv) Find the likelihood that a four branch selection diversity receiver will be 6 dB below the mean SNR threshold.
(v) Based on your answers above, is there a law of diminishing returns when diversity is used? (Nov/Dec 2015) (CO4,PO1,Apply)

17. Derive the mean square error for a Generic Adaptive Equalizer (Nov/Dec 2015) (CO4,PO1,Apply)

18. Explain in detail about linear and non linear equalizer (May/June 2016) (CO4,PO1,Apply)

19. Write short notes on (i) Spatial Diversity (CO4,PO1,Understand)
(ii) Frequency Diversity
(iii) Polarization Diversity
(iv) Time Diversity (May/June 2016)

20. Explain in detail the various factors to determine the algorithm for adaptive equalizer. Also derive the Least Mean Square Algorithm for adaptive equalizer. (Nov/Dec 2016) (CO4,PO1,Remember)

21.With relevant diagrams explain RAKE Receiver. Also discuss how time diversity is achieved in a CDMA technique using RAKE Receiver. (Nov/Dec 2016) (CO4,PO1,Understand).

22.Describe the role played by Equalization and diversity as Multipath mitigation techniques. Compare and contrast these two techniques. (April/May 2017) (CO4,PO1,Understand)

23.With a sketch describe RAKE Receiver (April/May 2017) (CO4,PO1,Understand)

24.Consider the design of US Digital Cellular Equalizer, where f = 900 MHz and the mobile velocity v = 80 km/hr, determine the maximum Doppler shift, the coherence time of the channel and the maximum number of symbols that could be transmitted without updating the equalizer assuming that the symbol rate is 24.3 k symbols/sec (April/May 2017). (CO4,PO1,Apply)

25.Assume four branch diversity is used, where each branch receives an independent Rayleigh fading signal. If the average SNR is 20 dB, determine the probability that the SNR will drop below 10 dB. Compare this with the case of a single receiver without diversity. (April/May

2017) (CO4,PO1,Apply)

26.Describe in detail about i) Linear Equalizers ii) Non-Linear Equalizers (Nov/Dec 2017) (CO4,PO1,Understand)

27.Analyze various diversity techniques used in wireless communication. (Nov/Dec 2017) (CO4,PO1,Understand)

28. Analyze and compare the error performance in fading channels with and without diversity reception techniques (Nov/Dec 2017) (CO4,PO1,Understand)

29.With valid statements, analytically prove that the adaptive equalizers exhibit superior performance over the conventional equalizers. (Nov/Dec 2017) (CO4,PO1,Understand)

30.Explain the principles of RAKE Receiver in detail (April/May 2018) (CO4,PO1,Understand)
31. Consider uncoded spatial multiplexing over a MIMO channel with $M_R \geq M_T$. Show that ML, MMSE and ZF receivers perform equally well if the channel is orthogonal $H^H H = \eta I_{MR}$ where η is a constant. What is the per-stream SNR? (April/May 2018) (CO4,PO2,Analyze/Evaluate)

32.i)What is Equalization? Why is the equalization in a wireless system required to be Adaptive? (November/December 2018) (CO4,PO1,Understand)
ii)Explain the RAKE Receiver with related sketch. (November/December 2018) (CO4,PO1,Understand)

33i) Describe any two diversity combining techniques stating their respective merits. (November/December 2018) (CO4,PO1, Understand)
ii) What is Zero Forcing Equalizer Algorithm? Explain. (November/December 2018) (CO4,PO1, Understand)

34) Draw and explain a simplified communication system using an adaptive equalizer at the receiver. (April/May 2019) (CO4,PO1, Understand)

35) i)Explain with a sketch, the working of RAKE Receiver. (April/May 2019) (CO4,PO1, Understand)
ii)Write a brief note on categories of space diversity reception methods. (April/May 2019) (CO4,PO1, Understand)

36(i) Write short notes on zero forcing and LMS algorithm (April/May 2021) (CO4,PO1, Understand)
(ii) Draw the Block diagram of simplified communication system using an adaptive equalizer at the receiver (April/May 2021) (CO4,PO1, Understand)

37(i) Discuss about any two receiver diversity technique (April/May 2021) (CO4,PO1, Understand)
(ii) Draw the structure of Rake Receiver(April/May 2021) (CO4,PO1,Understand)

PART-C

1. **Determine the error probability for different fading channels with diversity reception. (April/May 2018) (CO4,PO1,Apply)**
2. **Describe in detail about i) Linear Equalizers ii) Non-Linear Equalizers (CO4,PO1,Understand)**
3. **Analyze various diversity techniques used in wireless communication. (CO4,PO2,Analyze)**
4. **Derive the mean square error for a Generic Adaptive Equalizer (CO4,PO1,Apply)**
5. **Explain in detail the various factors to determine the algorithm for adaptive equalizer. Also derive the Least Mean Square Algorithm for adaptive equalizer. (CO4,PO1,Remember)**
6. **Analyze and compare the error performance in fading channels with and without diversity reception techniques. (Nov/Dec 2017) (CO3,PO1,Analyze)**
7. **With valid statements, analytically prove that the adaptive equalizers exhibit superior performance over the conventional equalizers (Nov/Dec 2017) (CO3,PO1,Analyze/Evaluate)**
8. **Draw the chart showing the classification of equalizers. (8) (Apr/May 2019) (CO3,PO1,Understand)**

EC 8652 ASSIGNMENT – IV
SET I

1. Discuss about Various diversity schemes used in the receiver of a wireless communication system (CO4,PO1, Understand)
2. Explain about Various combining schemes used in the receiver of a wireless communication system (CO4,PO1,Understand)
3. Derive the Mean Square Error (MSE) of an Adaptive Equalizer. (CO4,PO1,Apply).
4. In an adaptive PCM system for speech coding, the input speech signal is sampled at 8 kHz and each sample is represented by 8 bits. The quantizer step size is recomputed every 10 ms and it is encoded for transmission using 5 bits. Compute the transmission bit rate of such a speech coder. What would be the average and peak SQNR of this system(PO4, CO1, Apply)
5. The output of a speech coder has bits which contribute to signal quality with varying degree of importance. Encoding is done on blocks of samples of 20 ms duration (260 bits of coder output). The first 50 of the encoded speech bits (say type 1) in each block are considered to be the most significant and hence to protect them from channel errors are appended with 10 CRC bits and convolutionally encoded with a rate ½ FEC coder. The next 132 bits (say type 2) are appended with 5 CRC bits and the last 78 bits(say type 3) are not error protected. Compute the gross channel data rate achievable. (CO4,PO1,Apply)

EC 8652 ASSIGNMENT IV
SET-II

1. Find the outage probability of BPSK modulation at Pb = 10-3 for a Rayleigh fading channel with SC diversity for M=1 (no diversity), M=2 and M=3.Assume equal branch SNRs of γ= 15 dB. (CO4,PO1, Apply)

2. Compare the average probability of bit error with BPSK under MRC and EGC two branch diversity, assuming i.i.d Rayleigh fading with an average SNR of 10 dB on each branch. (CO4,PO1,Analyze)

3. Consider a (7,4) cyclic code with generator polynomial $g(X) = 1+X^2+X^3$. Determine if the codewords described by polynomials $c_1(X)=1+X^2+X^5+X^6$ and $C_2(X)= 1+X^2+X^3+X^5+X^6$ are valid codewords for this generator polynomial. (CO4,PO2, Analyze)
4. If the SNR of wireless communication link is 20 dB and the RF bandwidth is 30 kHz, determine the maximum theoretical date rate that can be transmitted. Compare this rate to the U.S.Digital Cellular Standard. (CO4,PO2, Analyze)
5. Write a simulation program for for zero forcing equalizer and Adaptive LMS Equalizer.(CO4,PO5,Apply)

EC 8652 ASSIGNMENT V
SET-III

1. Find the first zero-crossing RF bandwidth of a rectangular pulse which has Ts = 41.06 µs. Compare this to the bandwidth of a raised cosine filter pulse with Ts = 41.06 µs and α = 0.35(CO4,PO2, Analyze)
2. Describe various types of Vocoders(CO4,PO1, Understand)
3. Explain the operation of Equalizers (CO4,PO1, Understand)
4. Explain properties of linear block codes with concepts to illustrate syndrome and parity check matrix. (CO4,PO1,Understand)
5. Explain subband coding with block diagram(CO4,PO1, Understand)

UNIT V
PART A

1.What are the methods to increase the capacity of wireless systems without increasing required spectrum? (CO5,PO1,Remember)

Methods of improving the capacity of wireless systems without actually increasing the required spectrum.is to use Multiantenna Systems. Multiantenna systems can categorized into two types such as SMART ANTENNA systems and MULTIPLE INPUT AND MULTIPLE OUTPUT (MIMO) SYSTEMS.

2.What are smart antenna systems. (CO5,PO1Remember)

SMART ANTENNA are systems which are equipped with multiple antenna elements at one end link end only. In smart antennas antennas with multiple elements have signals from different elements are combined by an adaptive (intelligent) algorithm. Intelligence(Smartness) is not in the antenna but rather in signal processing. In the simplest case, combination of antenna signals is a linear combination using a weight vector **w**. The possible methods by which **w** is determined differentiates smart antennas. Smart antennas are also defined as a combiner of different antenna signals stresses the fact it exploits signals from spatial locations. Smart antennas are located at the Base Station (BS).

3. Why are Smart antennas required? (CO5,PO1,Understand)

Smart antennas are required for

1. Increasing of coverage
2. Increasing of capacity
3. Improving of Link Quality
4. Decrease Delay Dispersion.
5. Improvement of user position estimation.

4.What are the different approaches for improving capacity gains? (CO5,PO1Remember)

1. Spatial Filtering for Interference Reduction (SFIR): used in TMDA/FDMA systems. Space Division Multiple Access (SDMA).
2. Capacity Increase in CDMA systems.
3. Capacity increase in third-generation CDMA systems.

5.Define MIMO systems (CO5,PO1,Remember)

MIMO systems are multiple input multiple output systems which have multiantenna elements at both link ends. Multiple Input Multiple Output (MIMO) systems are also known as Multiple Element Antenna (MEA) systems, are wireless systems with MEAs at both link ends. Concept of research work in MEA systems was initiated by Winters in 1987 and it was further carried out in Foschini and Gans 1998, and Teletar 1999.

6.Draw the structure of a MIMO system model (CO5,PO1,Understand)

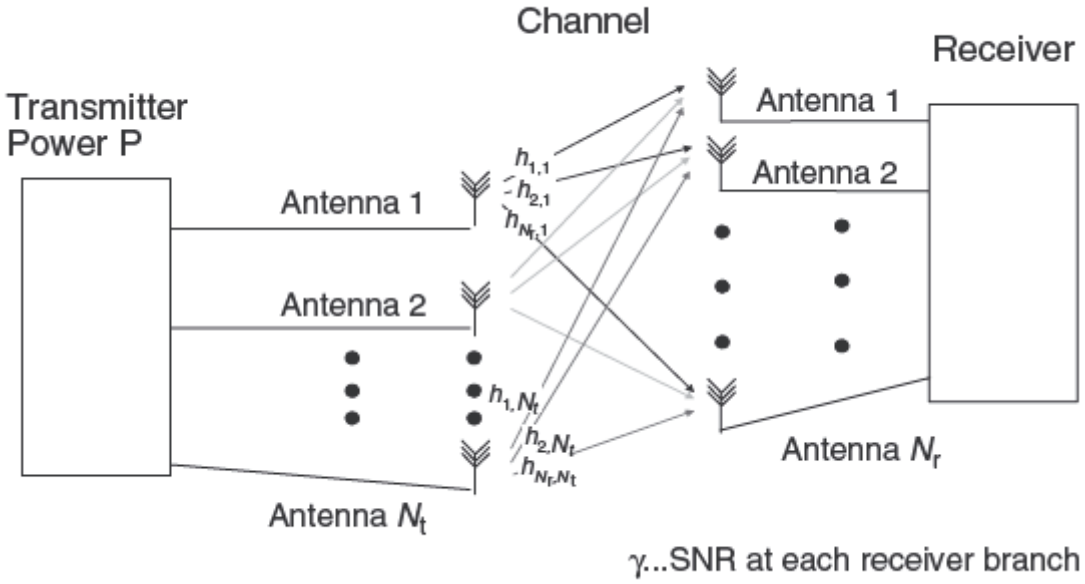

7.Explain MIMO system model (CO5,PO1,Remember)

A MIMO system model shown comprises of a transmitter in which the datastream passes through an encoder whose outputs are passed to N_t transmit antennas. The antennas transmit the signal into a wireless propagation channel which is assumed to be quasi-static frequency flat fading. Quasi-static fading refers to the fact that the coherence time of the channel is long that large number of bits can be transmitted within this time.

8. Define CSI, CSIT and CSIR (CO5,PO1,Remember)

In wireless communications, **channel state information** (**CSI**) refers to known channel properties of a communication link. CSI describes how a signal propagates from the transmitter to the receiver and represents the combined effect of reflection, diffraction and scattering. .

Channel State Information at Transmiter (CSIT) refers to the channel values known at the transmitter. Channel State Information (CSI) refers to the wireless channel magnitude and phase values. Channel State Information at Receiver (CSIR) refers to the channel values known at receiver.

9. Define Spatial Multiplexing (SM) (CO5,PO1,Remember)

Spatial Multiplexing (SM) is a new concept refers to the usage of employing multiple element antennas for transmission of several data streams in parallel. Spatial multiplexing allows direct improvement of capacity by simultaneous transmission of multiple data streams.

10. What is the concept of spatial multiplexing (CO5,PO1,Remember)

In spatial multiplexing an original high-rate data stream is multiplexed into several parallel streams, where each is sent from one transmit antenna element. The channel mixes the datastreams so that each of the receiver antenna elements observes a combination of them. If the channel is good in

terms of impulse response, the received signals represent linearly independent combinations. At the receiver by using appropriate signal processing at the receiver can separate the datastreams. A basic requirement is that the number of receive antenna elements is atleast as large as the number of transmit data streams. Through SM data rate is drastically increased by a factor of $min(N_t,N_r)$ Figure shown below provides Spatial Multiplexing where the input data is fed into a serial to parallel converter which produces parallel streams simultaneously and fed into a space time layered block code and passed into a modulator for transmission into the wireless channel.

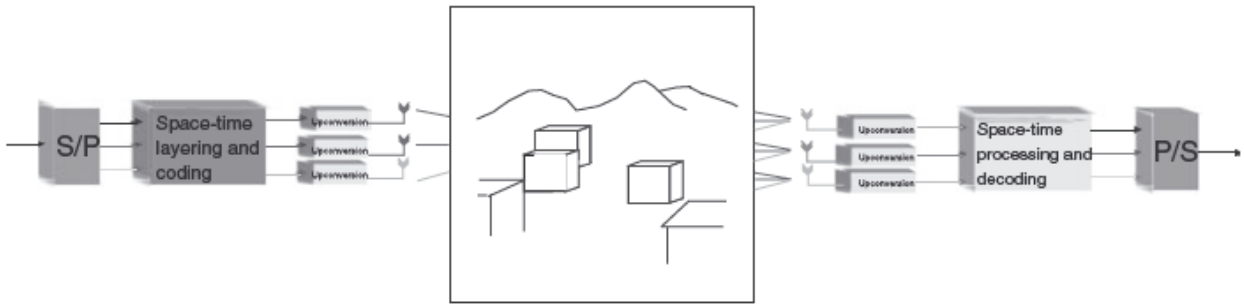

11.Define Precoding (CO5,PO1,Remember)

Precoding is a technique which exploits transmit diversity by the weighting information stream. The transmitter sends the coded information to the receiver in order to have the pre-knowledge of the channel. The receiver is a simple detector, such as matched filter, and does not have to know the channel side information. This technique will reduce the corrupted effect of communication channel.

12.Define Transmit Precoding (CO5,PO1,Remember)

Transmit precoding is used in multicarrier systems, where it converts the ISI channel into a set of noninterfering, orthogonal subcarriers each experiencing narrowband flat fading.

13.Define Beamforming (CO5,PO1,Remember)

Beamforming is the ability of a receiver to form an antenna pattern in the direction of transmitter, if the transmitter's spatial (angular position) is known to the receiver. Beamforming is a signal processing technique used to control the directionality of transmission and reception of control signals.

14. What is spatial filtering (CO5,PO1,Remember)

Spatial filtering (or) Beamforming is a signal processing technique used in sensor arrays for directional signal transmission or reception. This is achieved by combining elements in a phased array in such a way that signals at particular angles experience constructive interference while others experience destructive interference. Beamforming can be used at both the transmitting and receiving ends in order to achieve spatial selectivity. The improvement compared with omnidirectional reception/transmission is known as the receive/transmit gain (or loss).

15.What are the requirements for beamforming? (CO5,PO1,Understand)

To perform beamforming for a particular user, the base station needs to know the individual channel amplitude and phase responses from all the antennas which requires more information to feedback

than the overall signal to noise ratio.

16. Define Transmit Beamforming (CO5,PO1,Remember)

Transmit beamforming is aligning the transmit signal in the direction of transmit antenna array pattern. Transmit beamforming is defined as the process to allocate more power to the stronger antennas and arrange the signals from different antennas to align in phase at the receiver.

17.Define receive beamforming. (CO5,PO1,Remember)

In the point-to-point and uplink scenarios, a decorrelating receiver is the optimal linear filter at high Signal to Noise Ratio(SNR) when the interference from other streams dominates over the additive noise. For general SNR, the linear MMSE receiver is used to optimally balance between inteay rference and noise suppression. This is also called as receive beamforming.

18.Define Opportunistic Beamforming. (CO5,PO1,Remember)

Opportunistic beamforming is one in which channel fluctuation can be induced in situations when the natural fading has small dynamic range and is slow. From the cellular system point of view, this technique also increases the fluctuations of the interference imparted on adjacent cells, and presents an opposing philosophy to the notion of interference averaging in CDMA systems.

19. Define Transmit Diversity. (CO5,PO1,Remember)

Transmit diversity involves using multiple antennas at the transmitter, whereby information is transmitted in different antennas under the presumption that if one the antennas surfaces a deep fade the others will receive a quality signal

20. Define Receive Diversity (CO5,PO1,Remember)

Receive diversity involves using multiple antennas at the receiver, whereby information is received in different antennas and one of the antennas receives a good quality signal.

21. Define Capacity of a wireless channel. (CO5,PO1,Remember)

Capacity (or) instantaneous capacity of a wireless channel refers to an information theoretic bound, which provides maximum amount of information (data bits) which can be transmitted into a wireless channel.

22. Define Ergodic Capacity (CO5,PO1,Remember)

This is the expected value of capacity (or) instantaneous capacity taken over all realizations of the channel.

23.Define Outage capacity (CO5,PO1,Remember)

This is the minimum transmission rate that is achieved over a certain fraction of time of 90-95%

24.Define Capacity of a fading channel. (CO5,PO1,Remember)

The capacity of a fading channel is given as $C = \log_2(1+\gamma|\mathbf{H}|^2)$; where γ is the signal to noise **ratio at** the receiver; **H** is normalized transfer function from the transmitter to the receiver.

25. What is Antenna Diversity? (Nov/Dec 2015) (CO5,PO1,Remember)

Antenna Diversity is transmitting the same information by using more number of antennas.

26. Write down the expressions for probability of error for BPSK modulation techniques, with coherent detection for the following cases, (a) AWGN (b) Rayleigh Fading (Nov/Dec 2015) (CO5,PO1,Remember)

AWGN---- $P_b = \frac{1}{2} erfc\left(\sqrt{\frac{E_b}{N_o}}\right)$**;**

Rayleigh fading ---Coherent Binary PSK; $P_{e,BPSK} = \frac{1}{2}\left[1 - \sqrt{\frac{\Gamma}{1+\Gamma}}\right]$; where $\Gamma = \frac{E_b}{N_o}\bar{\alpha}^2$ is the Average value of signal to noise ratio.

27. What is MIMO System (May/June 2016) (CO5,PO1,Remember)

MIMO systems are multiple input multiple output systems which have multiantenna elements at both link ends. Multiple Input Multiple Output (MIMO) systems are also known as Multiple Element Antenna (MEA) systems, are wireless systems with MEAs at both link ends. Concept of research work in MEA systems was initiated by Winters in 1987 and it was further carried out in Foschini and Gans 1998, and Teletar 1999.

28. What is transmit diversity (May/June 2016) (CO5,PO1,Remember)

Transmit diversity involves using multiple antennas at the transmitter, whereby information is transmitted in different antennas under the presumption that if one the antennas surfaces a deep fade the others will receive a quality signal.

29.How does spatial multiplexing work? (Nov/Dec 2016) (CO5,PO1,Understand)

Spatial filtering (or) Beamforming is a signal processing technique which works in sensor arrays for directional signal transmission or reception. This is achieved by combining elements in a phased array in such a way that signals at particular angles experience constructive interference while others experience destructive interference. Beamforming can be used at both the transmitting and receiving ends in order to achieve spatial selectivity. The improvement compared with omnidirectional reception/transmission is known as the receive/transmit gain (or loss).

30.What is ergodic capacity and outage capacity of a flat fading channel. (Nov/Dec 2016) (CO5,PO1,Understand)

Ergodic Capacity is the expected value of capacity (or) instantaneous capacity taken over all realizations of the channel.

Outage capacity is the minimum transmission rate that is achieved over a certain fraction of time of 90-95%.

31.What is spatial multiplexing (April/May 2017) (CO5,PO1,Remember)

Spatial filtering (or) Beamforming is a signal processing technique used in sensor arrays for

directional signal transmission or reception. This is achieved by combining elements in a phased array in such a way that signals at particular angles experience constructive interference while others experience destructive interference.

32.What is Channel State Information? What is its benefit? (April/May 2017) (CO5,PO1, Remember)

In wireless communications, **channel state information** (**CSI**) refers to known channel properties of a communication link. CSI describes how a signal propagates from the transmitter to the receiver and represents the combined effect of reflection, diffraction and scattering.

33. State True or false: Justify your answer. (April/May 2018) (CO5,PO1, Remember)

Channel knowledge at the transmitter is not required in MIMO channels to extract multiplexing gain. FALSE – channel knowledge is required

Channel knowledge at the transmitter is required in MIMO channels to extract diversity gain. TRUE – channel knowledge is required to have diversity gain.

34. List different types of diversity schemes. (April/May 2018) (CO5,PO1, Remember)

Micro diversity and Macro diversity are the two major diversity schemes.

35. What is meant by Spatial Multiplexing and Spatial Diversity. (November/December 2018) (CO5,PO1, Remember)

Spatial filtering (or) Beamforming is a signal processing technique used in sensor arrays for directional signal transmission or reception. This is achieved by combining elements in a phased array in such a way that signals at particular angles experience constructive interference while others experience destructive interference.

The most common diversity technique is called spatial diversity, whereby multiple antennas are strategically spaced and connected to a common receiving system. While one antenna sees a signal null, one of the other antennas may see a signal peak, and the receiver is able to select the antenna with the best signals at any time. **Antenna diversity**, also known as **space diversity** or **spatial diversity**.

36. What is Channel State Information. How is it obtained. (November/December 2018) (CO5,PO1, Remember)

In wireless communications, **channel state information** (**CSI**) refers to known channel properties of a communication link. CSI describes how a signal propagates from the transmitter to the receiver and represents the combined effect of reflection, diffraction and scattering.

37. **Differentiate Transmit Diversity from Random Beamforming. (April/May 2019) (CO5,PO1,Remember)**

Transmit diversity involves using multiple antennas at the transmitter, whereby information is transmitted in different antennas under the presumption that if one the antennas surfaces a deep fade the others will receive a quality signal

38. Define Precoding. (April/May 2019) (CO5,PO1,Remember)

Precoding is a technique which exploits transmit diversity by the weighting information stream. The transmitter sends the coded information to the receiver in order to have the pre-knowledge of the channel. The receiver is a simple detector, such as matched filter, and does not have to know the channel side information. This technique will reduce the corrupted effect of communication channel.

39.Compute the capacity of the chancel with SNR 10 dB (April/May 2021) (CO5,PO1,Apply)

$C = B\log_2(1+S/N)$;

Assume B= 1MHz; S/N= 10

$C= 1x\ 10^6\ x\log_2(1+10)$;

$C= 1x\ 10^6\ x\log_2(11)$;

$C= 3.45x\ 10^6$ bit/sec/Hz

40.What is the purpose of usage of Beam forming in MIMO system (April/May 2021) (CO5,PO1,Understand)

Beamforming is a signal processing technique used in sensor arrays for directional signal transmission or reception. This is achieved by combining elements in a phased array in such a way that signals at particular angles experience constructive interference while others experience destructive interference. Beamforming can be used at both the transmitting and receiving ends in order to achieve spatial selectivity

PART B

1. With diagram, explain the system model for MIMO systems. (CO5,PO1,Understand)

2. Discuss about the operation of Spatial Multiplexing systems. (CO5,PO1,Understand)

3. Explain the operation of transmit precoding and receiver precoding schemes. (CO5,PO1,Understand)

4.Why is beamforming important for wireless systems. With Illustration explain transmit beamforming, receive beamforming and opportunistic beamforming. (CO5,PO1,Understand)

5. Using diagrams explain transmit diversity and receive diversity. (CO5,PO1,Understand)

6. Derive the capacity of a fading channel for information transmitted from a wireless system. (CO5,PO1,Apply)

7. Derive the capacity of Non fading channel for information transmitted from a wireless system. (CO5,PO1,Apply)

8. Determine the capacity of frequency selective fading channel and explain the concept of waterfilling/waterpouring. (Nov/Dec 2015) (CO5,PO1,Apply)

9. Determine the capacity of slow fading channel and prove that the outage probability for receive diversity system with L receive antennas is $P_{out}(R) = \frac{(2^R - 1)}{L!\,SNR^L}$ **; where R is the data rate.**

(Nov/Dec 2015) (CO5,PO1,Apply)

10. Explain in detail how inherent delay in a multiuser system is overcome by

beamforming.(May/June 2016) (CO5,PO1,Understand)
11. Explain in detail spatial multiplexing of a MIMO system. (May/June 2016) (CO5,PO1,Understand)
12. Explain with relevant diagrams the layered space time structure with respect to MIMO systems. (May/June 2016) (CO5,PO1,Understand)

13.With a neat diagram explain the system model for multiple input multiple output systems. (Nov/Dec 2016) (CO5,PO1,Understand)
14.Discuss in detail the classification of algorithms for MIMO based system. (Nov/Dec 2016) (CO5,PO1,Understand)

15.Calculate the capacity of MIMO system in flat fading and nonfading channels (Nov/Dec 2016) (CO5,PO1,Understand)

16.Discuss in detail the capacity in fading and non-fading channels. (CO5,PO1,Understand)

17.Describe MIMO systems with emphasis on their requirement in a wireless communication environment. (April/May 2017) (CO5,PO1,Understand)
18.Describe the concepts of Pre-coding and Beamforming (April/May 2017) (CO5,PO1,Understand)

19.What is meant by MIMO systems? Explain the system model with necessary diagrams. (Nov/Dec 2017) (CO5,PO,Understand)

20.Distinguish between different beamforming techniques (Nov/Dec 2017) (CO5,PO,Understand)

21.Derive an expression for the capacity of the following systems
a)SIMO system assuming that the channel is known at Receiver
b)MISO system assuming that the channel is known at Transmitter
c)MIMO system assuming that channel is unknown at the Transmitter.
(April/May 2018) (CO5,PO1,Apply)

22. Explain clearly how spatial multiplexing works with a neat diagram and write down the expression for channel matrix and received signal vector. (April/May 2019) (CO5,PO1,Understand)

23. Explain the concept of diversity with CSI at the transmitter and Derive the expression for capacity (April/May 2019) (CO5,PO1,Understand)

24(i) Discuss a 2 x 2 MIMO system and provide your understanding on Alamouti Code (April/May 2021) (CO5,PO1,Understand)
(ii)Write short notes on spatial multiplexing (April/May 2021) (CO5,PO1,Understand)

25(i)Mention the importance of channel state information (April/May 2021) (CO5,PO1,Understand)

(ii) How MIMO creates performance gains in a fading channel (April/May 2021) (CO5,PO1,Understand)

PART-C

1. Derive the capacity of a fading channel for information transmitted from a wireless system. (CO5,PO1,Apply)

2. Derive the capacity of Non fading channel for information transmitted from a wireless system. (CO5,PO1,Apply)

3.With a neat diagram explain the system model for multiple input multiple output systems. (CO5,PO1,Understand)

4.Why is beamforming important for wireless systems. With Illustration explain transmit beamforming, receive beamforming and opportunistic beamforming. (CO5,PO1,Understand)

5. Determine the capacity of frequency selective fading channel and explain the concept of waterfilling/waterpouring. (CO5,PO1,Apply)

6. Determine the proper spatial sampling interval required to make small scale propagation measurements which assume that consecutive samples are highly correlated in time. How many . samples will be required over 10m travel distance if £:=1900 MHz and v = 50 m/s. How long would it take to make these measurements, assuming they could. be made in real time for a moving vehicle? What is the Doppler spread for the channel? (7) (APR/May 2019) (CO5,PO1,Apply)

7. In a cellular MIMO system: let the BS have 8 antenna elements, and each MS have 2 antenna elements. The system has 5MHz bandwidth centered at 2GHz carrier frequency, and operates In a channel with 250 kHz coherence bandwidth. The coherence time is 5 ms, corresponding to typical vehicular speeds. With 30 users in the cell, what is the total overhead data rate for the feedback? (4)
(Assume that real and imaginary parts are quantized with 6 bits each, and a rate 2/3 code is used to protect the feedback information.) Justify with the answer why the feedback reduction techniques are important? (6) (APR/May 2019) **(CO5,PO1,Apply)**

8. Compare and contrast wired and wireless communication. (5) (APR/May 2019) (CO5,PO1,Understand)

EC 8652- Assignment V

(Regulations 2017 for VI SEM ECE)

SET-I

1. Describe about SMART antenna systems (CO5,PO1, Understand)
2.Explain the concepts relating to system model of MIMO communication systems. (CO5,PO1,understand)
3.Explain about spatial multiplexing system model with block diagram.(CO5,PO1,Understand)
4. What is the separation distance between the transmitter and the receiver with an allowable path loss of 150 dB and shadow effect fo 10 dB? The path loss in dB is given as Lp = 133.2 +43 log d; d – separation distance in km. (CO5, PO1, Apply)
5. Assuming the speed of a vehicle is equal to 60 mph(88ft/sec), carrier frequency, fc= 860 MHz and rms delay spread Td – 2 micro sec, calculate coherence time and coherence bandwidth. At a coded symbol rate of 19.2 kbps(IS-95) what kind of symbol distortion will be experienced. What type of fading will be experienced by the IS-95 channel? (CO5, PO1, Apply)

EC 8652 – ASSIGNMENT –V
SET-II

1. In a WLAN the minimum SNR required is 12 db for an office environment. The background noise at the operational frequency is -115 dbm. If the mobile terminal transmit power is 100 mw, What is the coverage radius of an access point if there are three floors between the mobile transmitter and the access point? (CO5, PO1, Apply)
2. Given a flat rural environment with a path loss of 140 dB, a frequency of 900 MHz, 8 dB transmit antenna gain and 0 dB receive antenna gain, data rate of 9.6 kbps, 12 dB in antenna feed line loss, 20 dB in other losses, a fade margin of 8 dB a required Eb/No of 10 dB, receiver amplifier gain of 24 dB, noise figure total of 6 dB and a noise temperature of 290 K, find the total transmit power required of the transmitter in watts for link margin of 8 dB. (CO5,PO1, Apply)
3. What should be the sampling rates to produce a high-quality digitalization of a 20 kHz band width music signal? (CO5,PO1, Apply)
4. In a digital communication system, the signal-to-noise ratio spectral density ratio is 48 dB-Hz, the available bandwidth is equal to 45 kHz, and the data rate is 9.6 kbps. The required BER performance P_b is 10^{-5}. what is the design choice of the modulation scheme without an error-correction coding? (CO5,PO1,Apply)
5. Consider a cellular system in which total available voice channels to handle the traffic are 960. The area of each cell is 6 km2 and the total coverage area of the system is 2000 km2. Calculate (a) the system capacity if the cluster size, N(reuse factor) is 4 and (b) the system capacity if the cluster size is 7. How many times would a cluster of size 4 have to be replicated to cover the entire cellular area? Does decreasing the reuse factor N increase the system capacity? (CO5,PO2, Analyze)

EC 8652– ASSIGNMENT –V
SET-III

1. Consider the advanced mobile phone system in which an S/I ratio of 18 dB is required for the accepted voice quality. What should be the reuse factor for the system? Assume $\gamma = 4$. What will be the reuse factor of the Global System of Mobile (GSM) system in which an S/I of 12 dB is required? (CO5, PO2, Analyze)

2. In first-generation AMPS system where there are 395 channels of 30 kHz each in a bandwidth of 12.5 MHz, what is multiple access spectral efficiency for FDMA? (CO5,PO1,Apply)

3.Calculate the capacity and spectral efficiency of a TDMA system using the following parameters bandwidth efficiency factor η_b= 0l9 bit efficiency(with QPSK) μ=2; voice activity factor η_f = 1.0; one way system bandwidth Bw = 12.5 MHz; information bit rate R = 16.2 kbps and frequency reuse factor N = 19. (CO5,PO1, Apply)

4. Calculate the capacity and spectral efficiency of the DS-CDMA system with an omnidirectional cell using the following data: Bandwidth efficiency ηb= 0.9; frequency reuse efficiency ηv=0.45; capacity degradation factor cd = 0.8 ; voice activity facot vf = 0.4; information bit rate R = 18.2 kbps; Eb/Io = 7 dB; one way system bandwidth Bw = 12.5 MHz. Neglect other sources of interference. (CO5, PO1, Apply)

5.Explain Precoding schemes available for wireless communication system (CO5,PO1,Understand)